RAK
CERAMICS

Installation

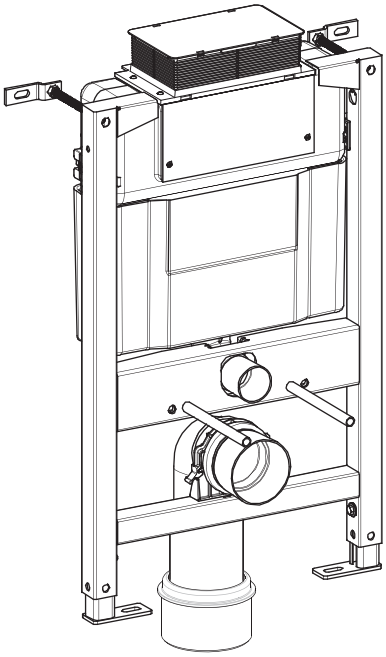

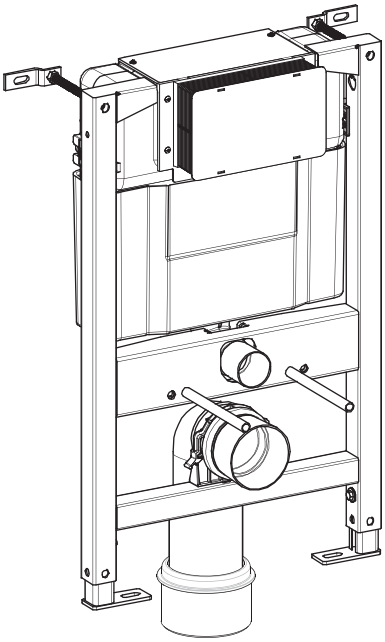

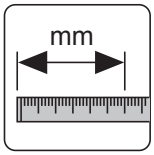

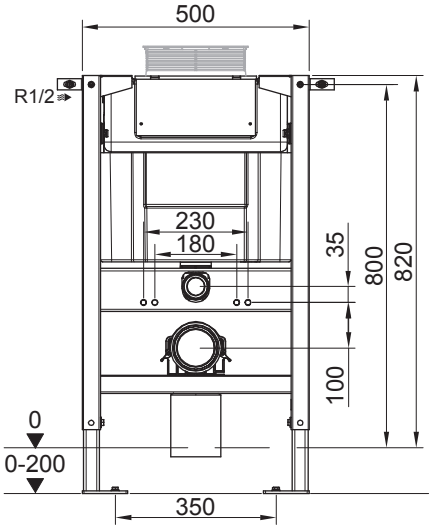

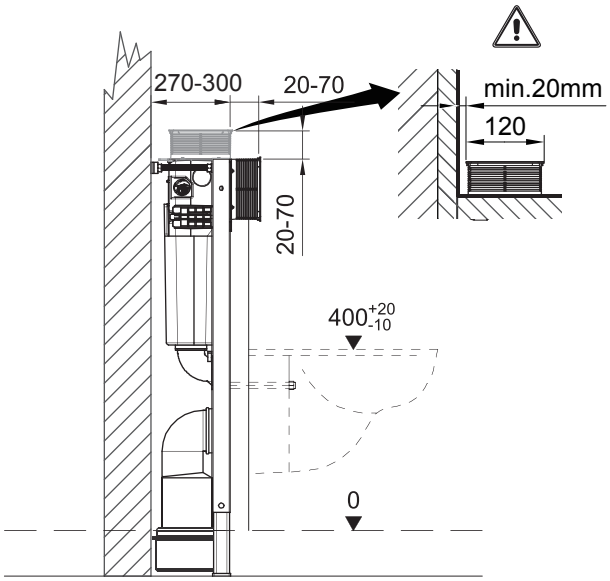

560477 17-1.3

RAK
CERAMICS

Installation

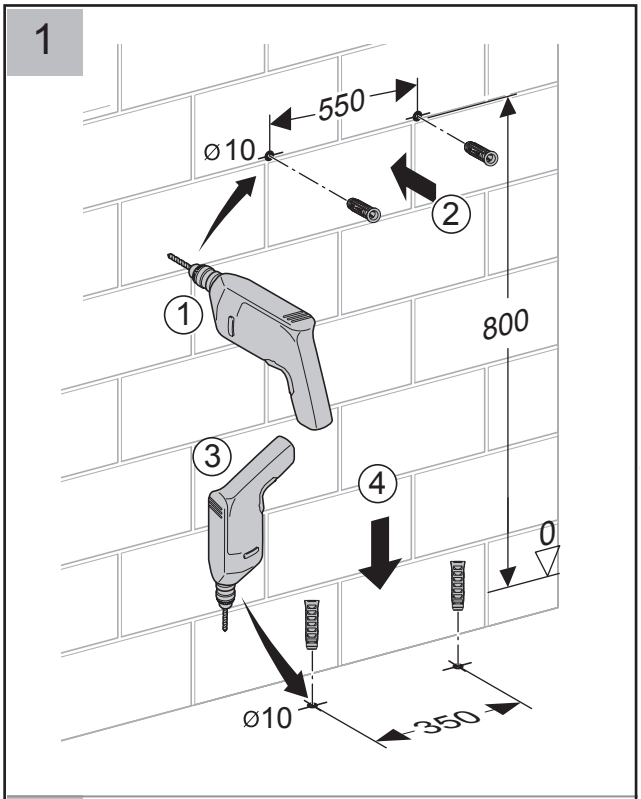

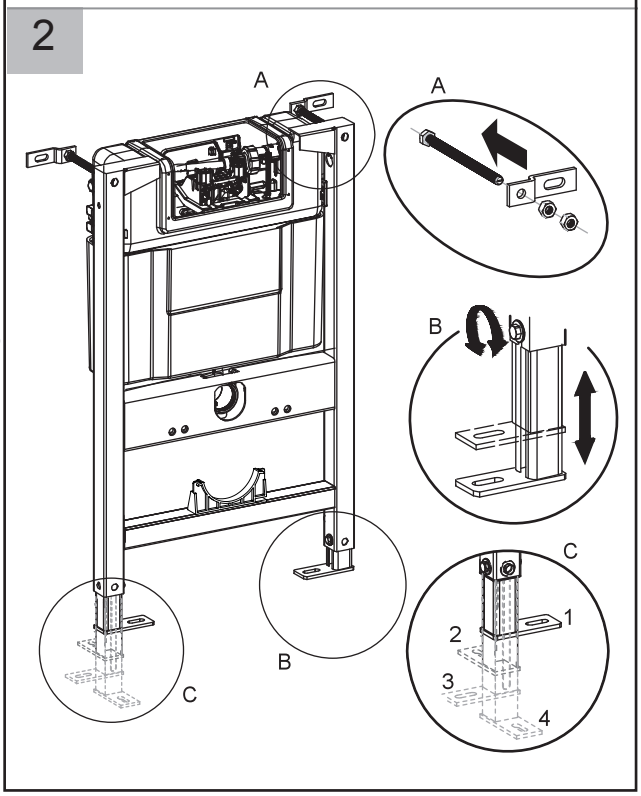

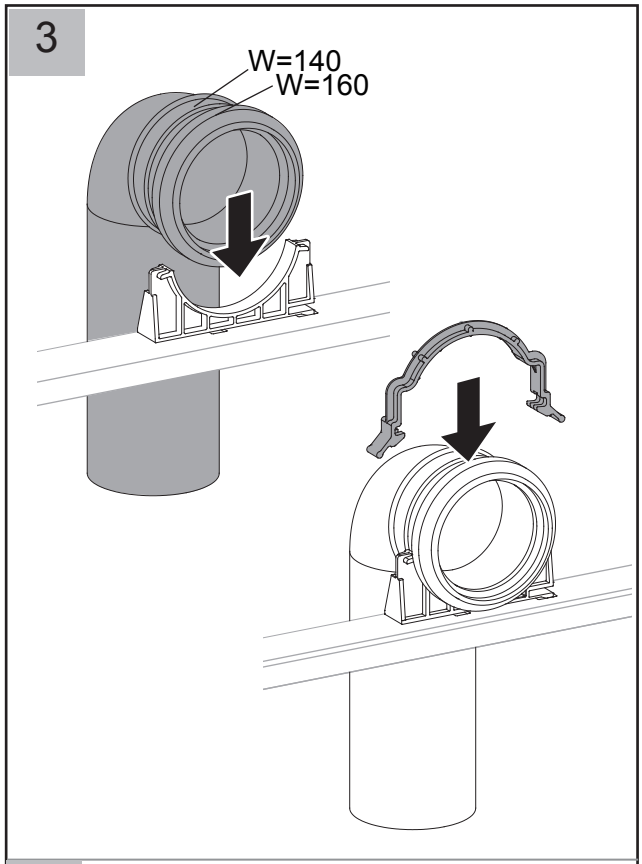

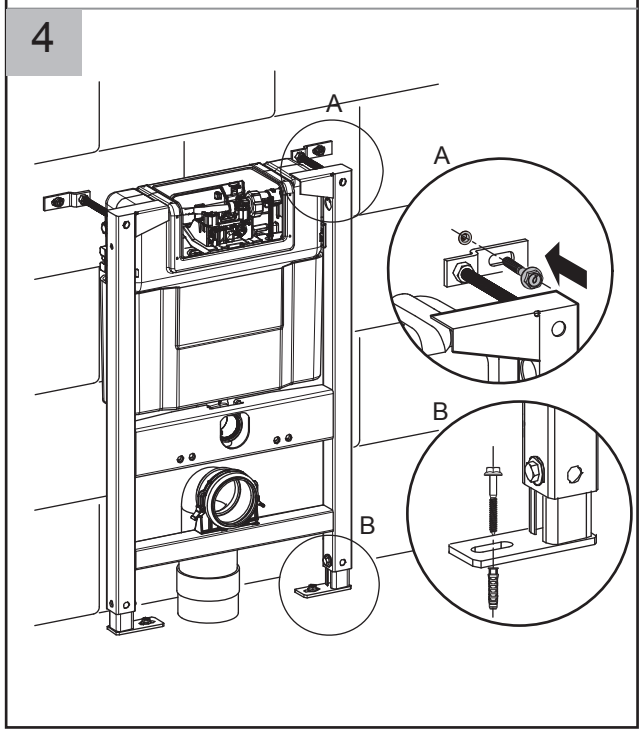

RAK
CERAMICS

Installation

5

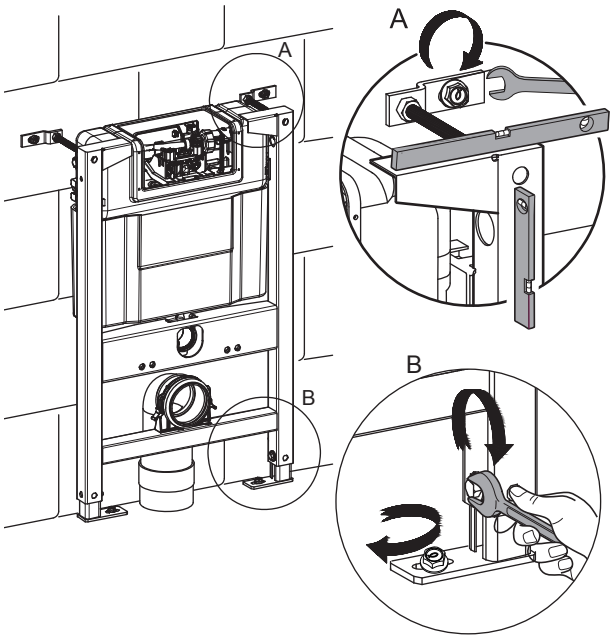

7

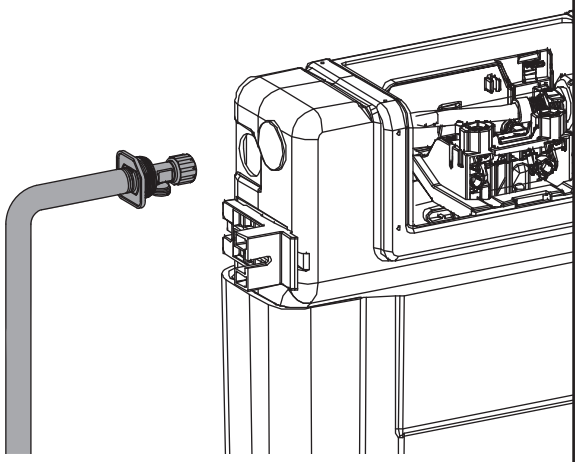

6

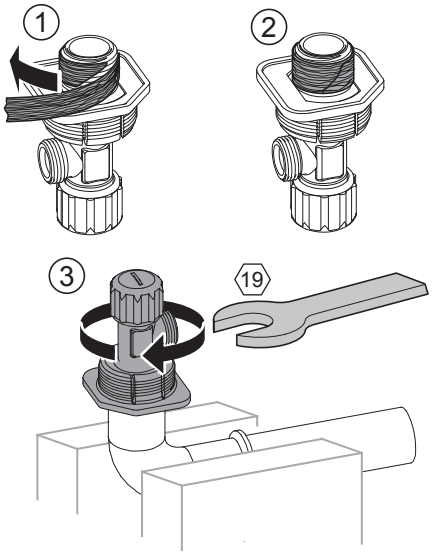

8

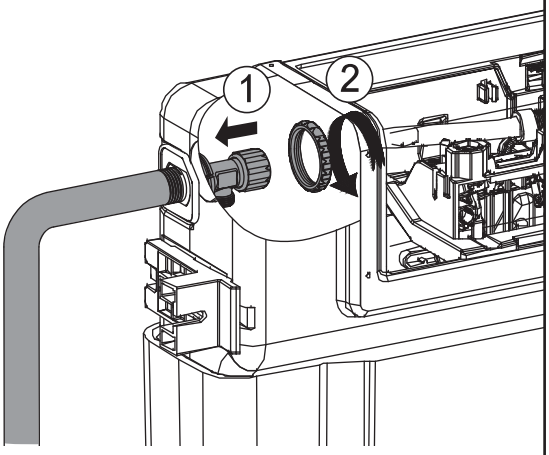

RAK
CERAMICS

Installation

9

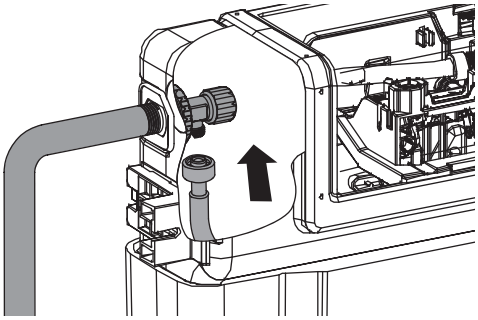

10

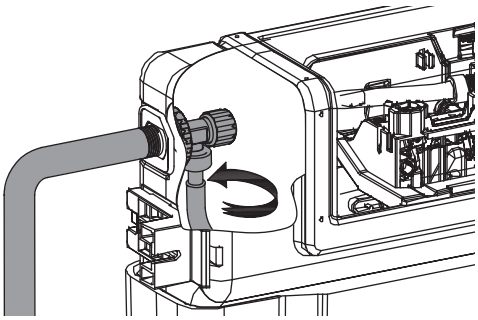

11

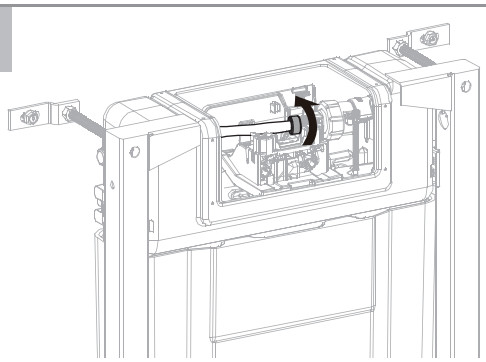

12

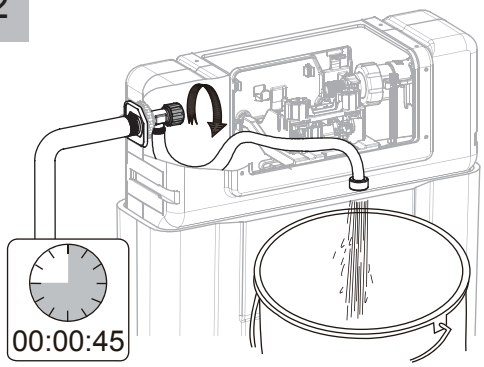

13

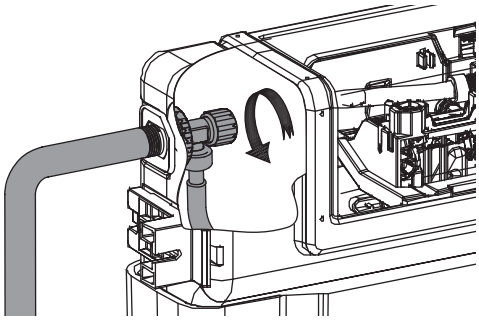

14

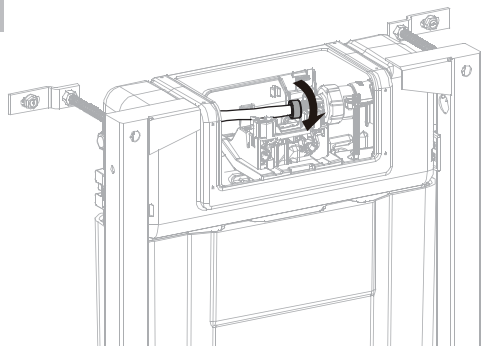

15

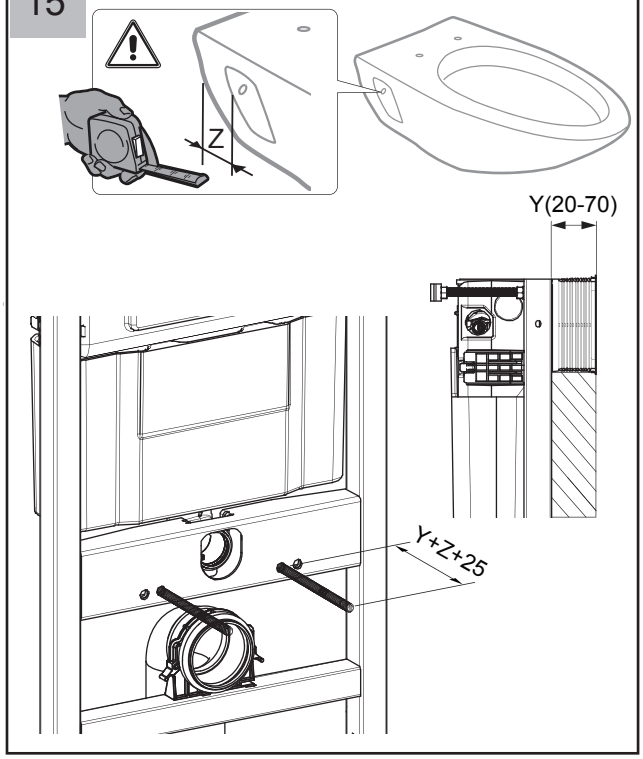

RAK
CERAMICS

Installation

16

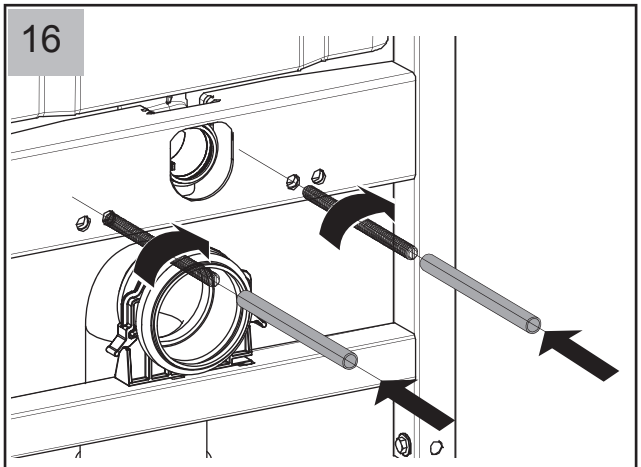

17

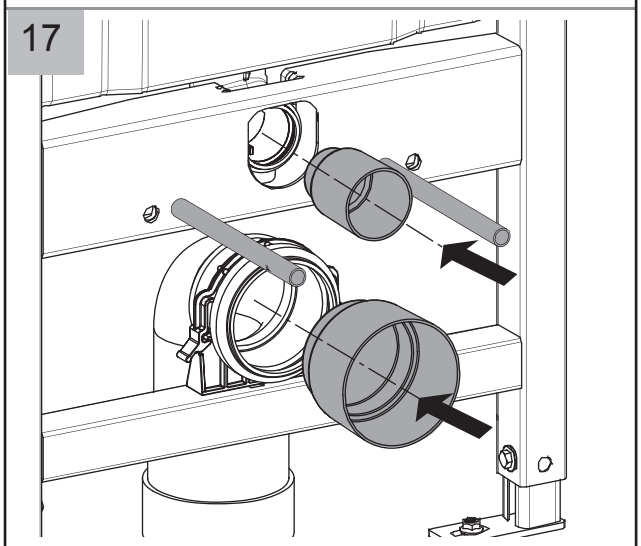

18

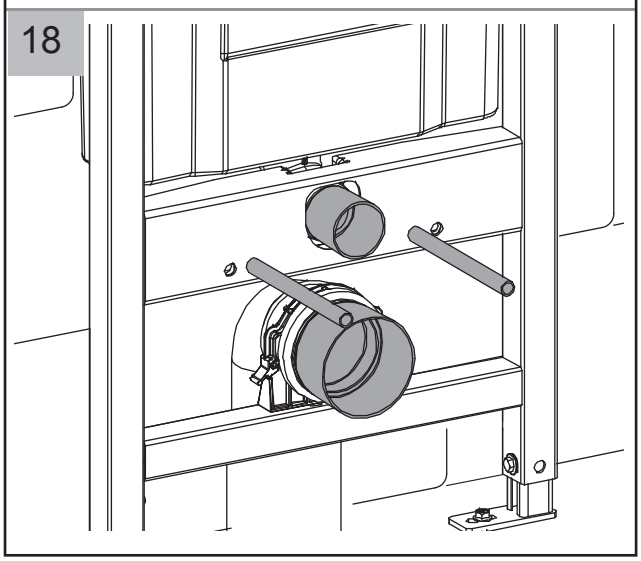

19

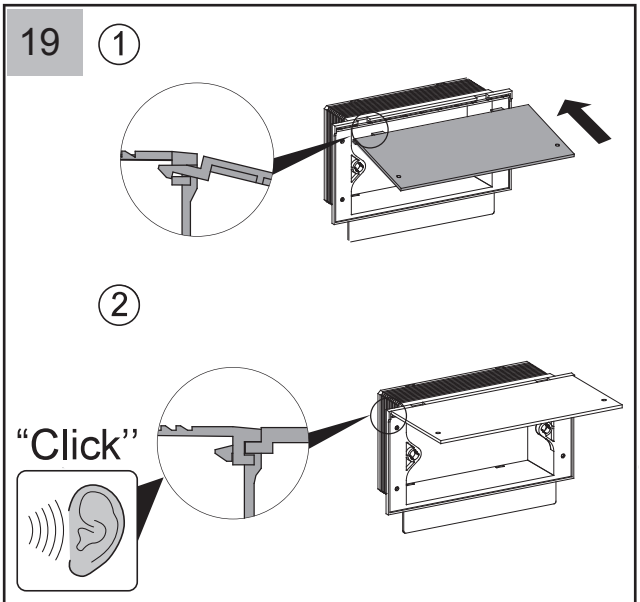

20

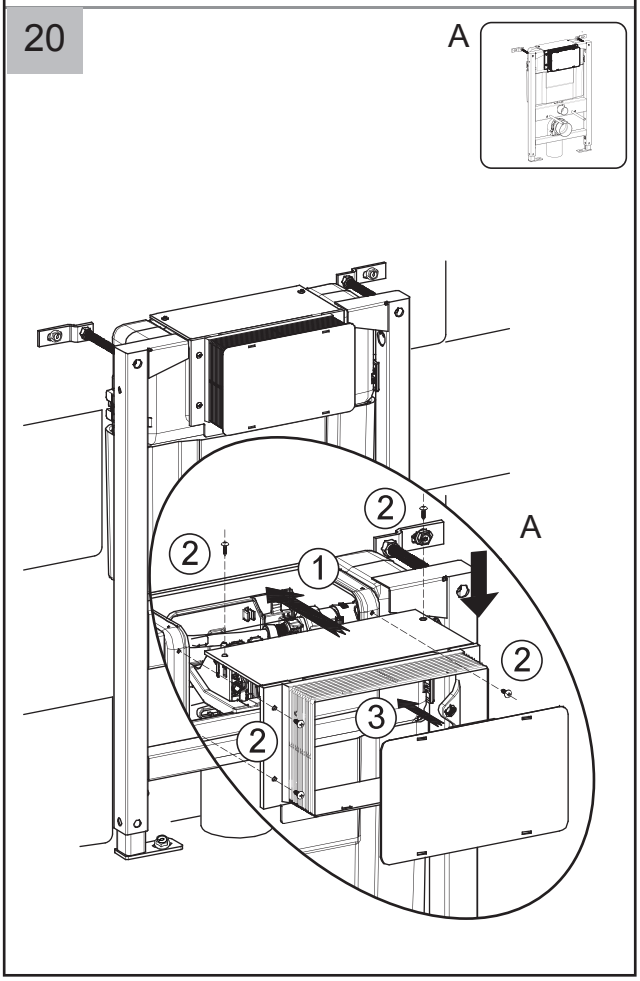

RAK
CERAMICS

Installation

21

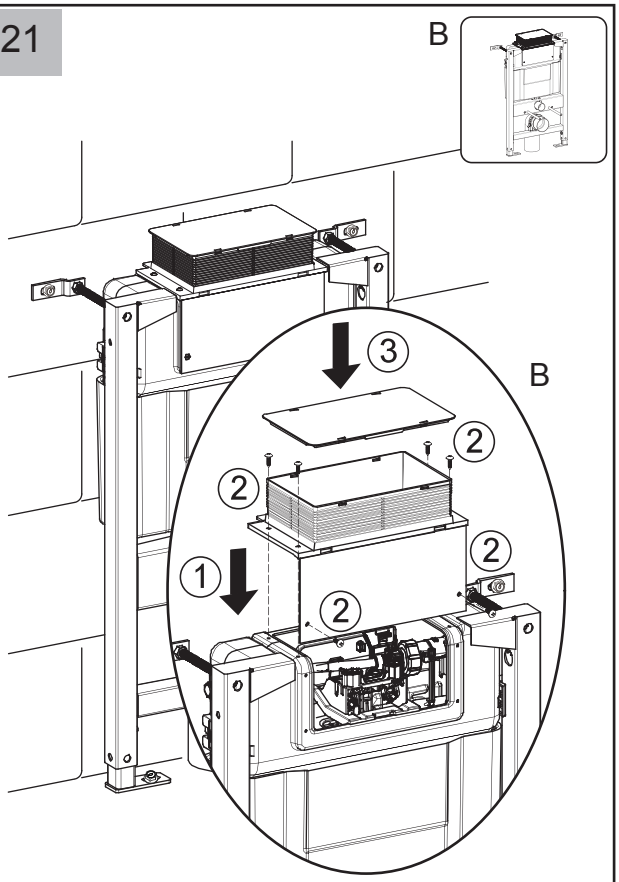

22

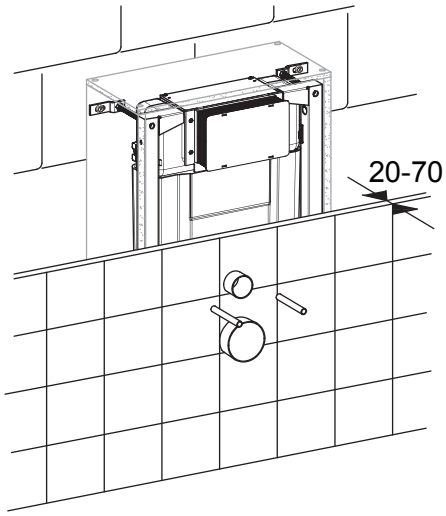
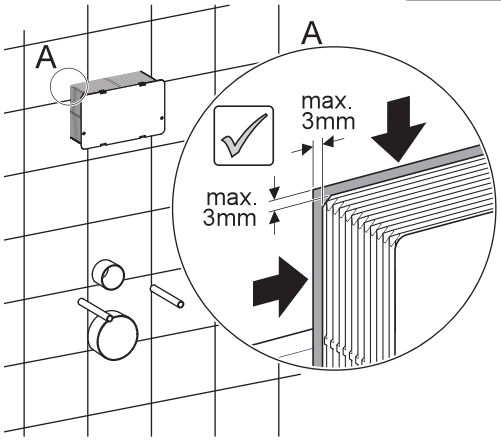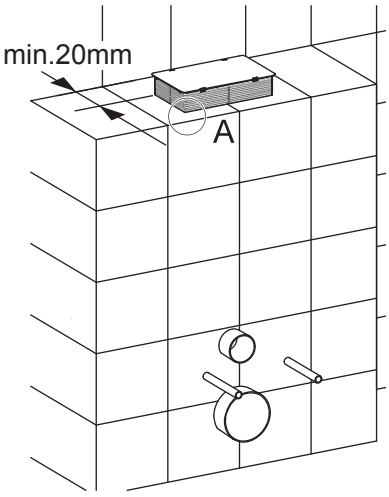
23