3-hole deck mounted basin mixer

Installation

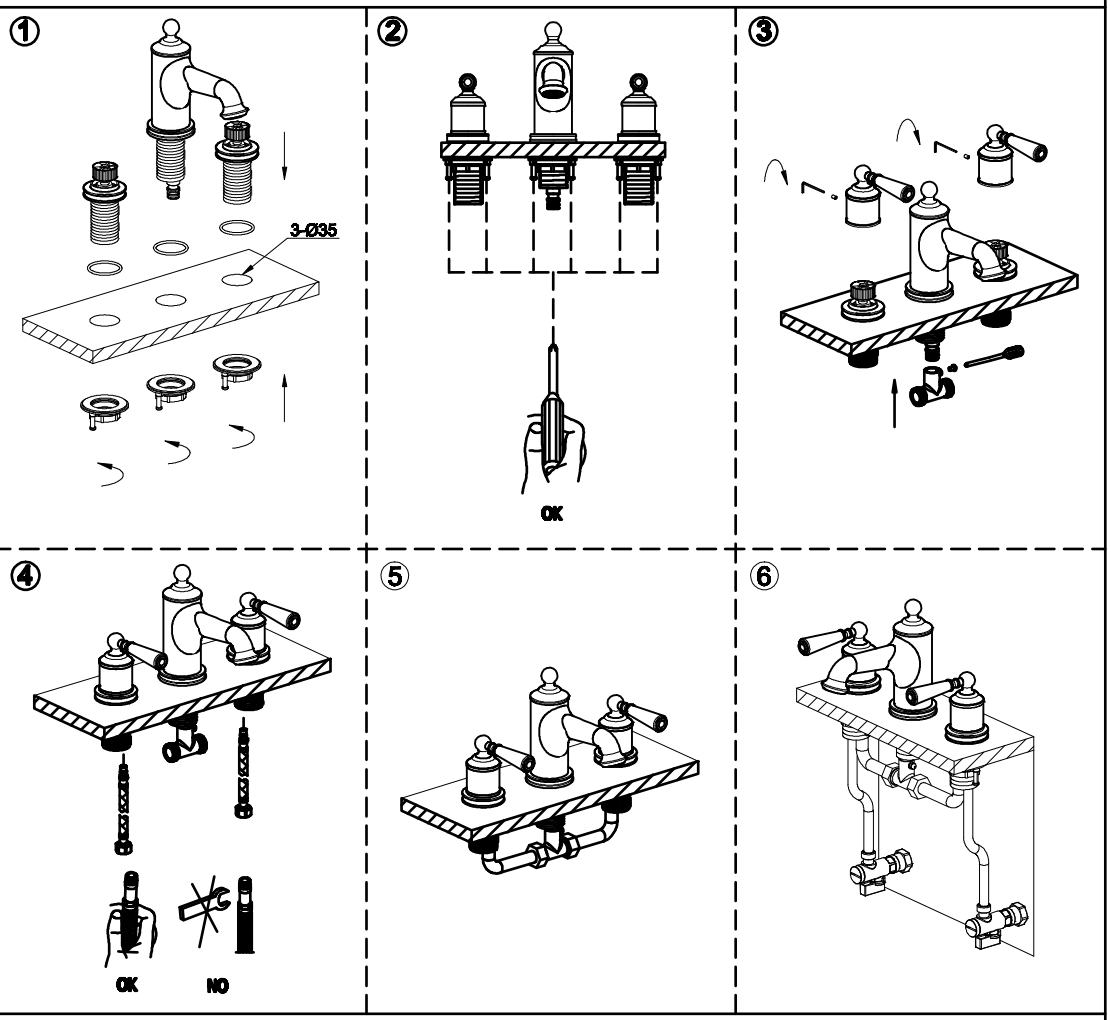

Technical drawing

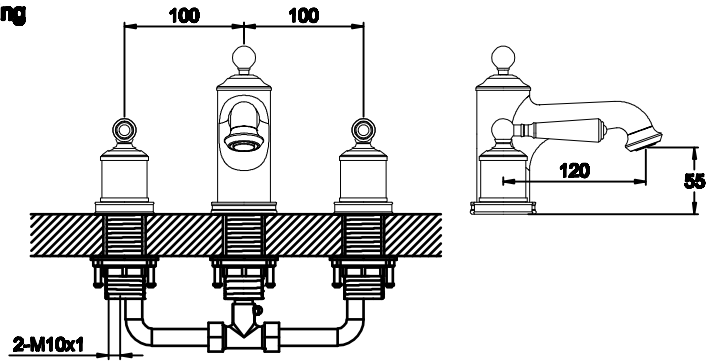
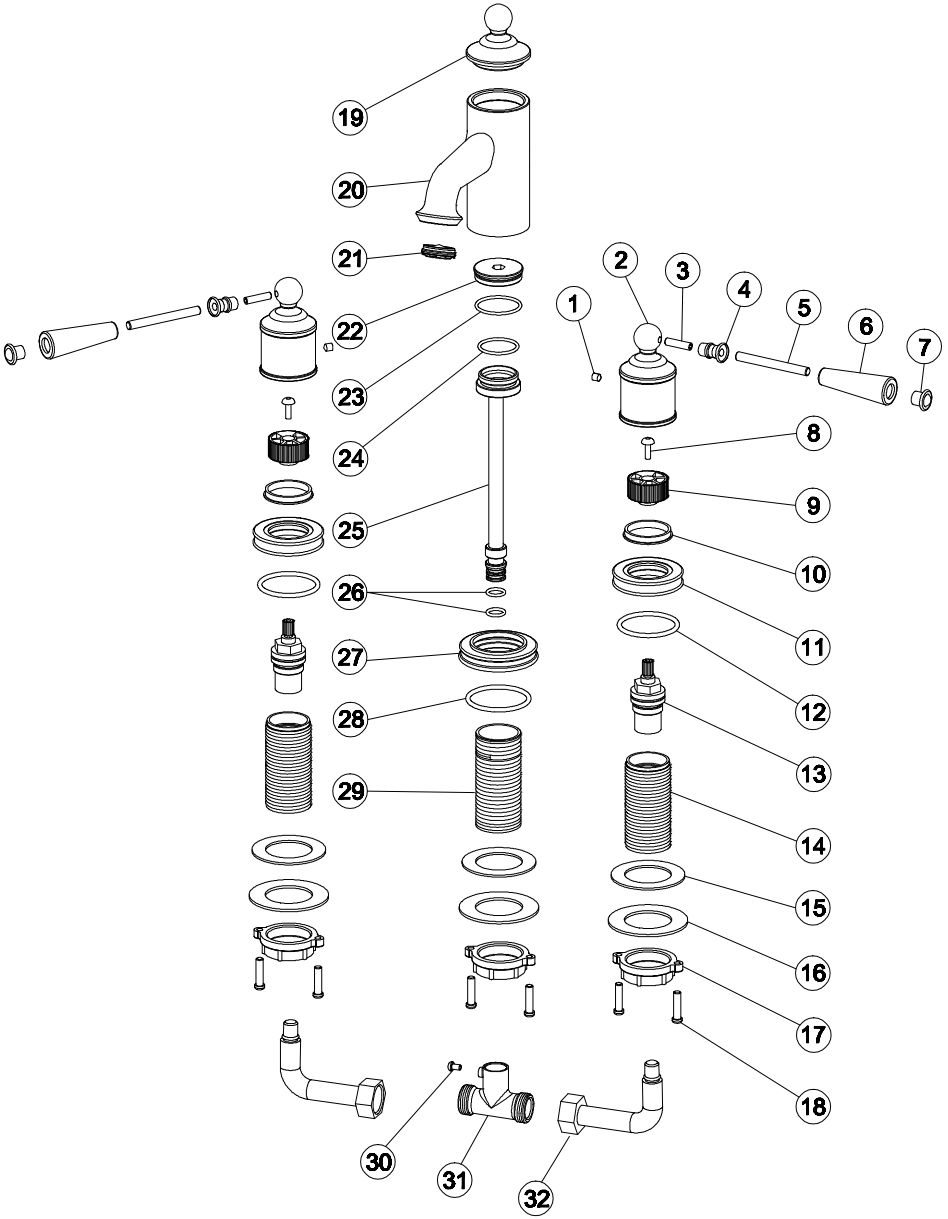
Explosion drawing