Milano

Corner Vanity Unit Guide

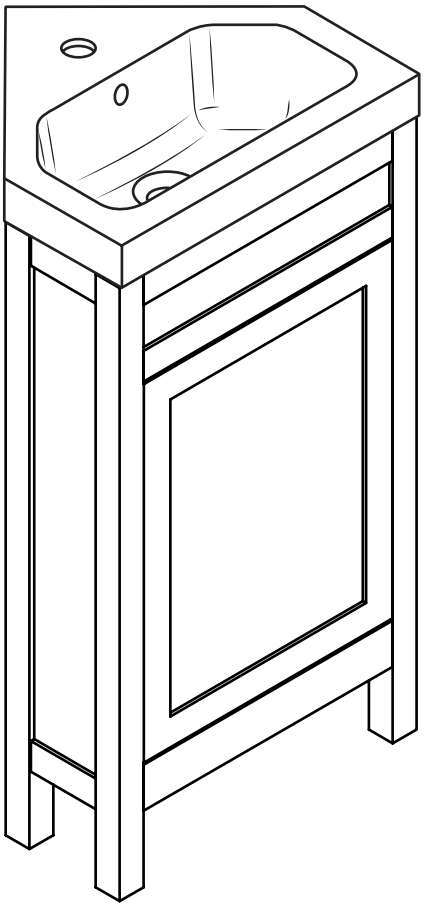

Installation Guide

Tools required for installing:

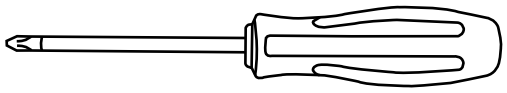

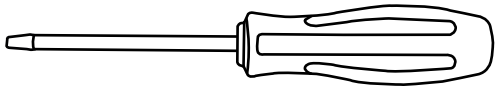

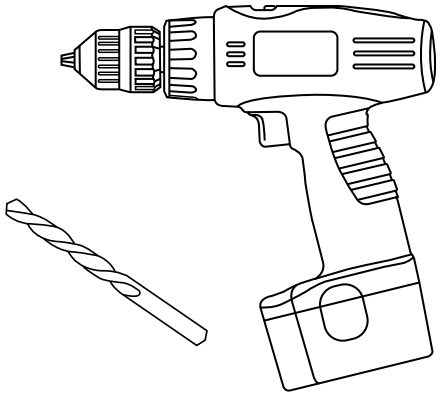

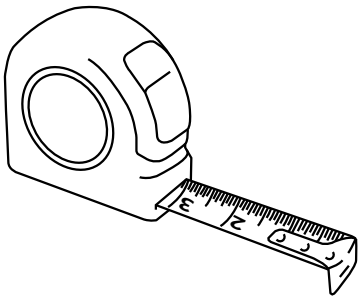

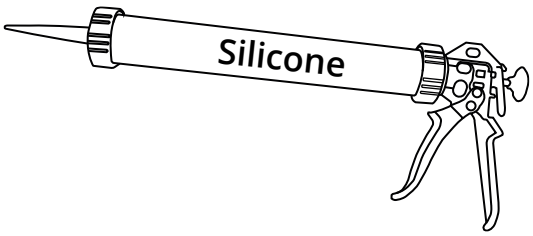

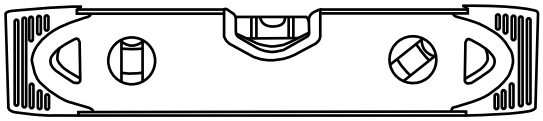

Parts included:

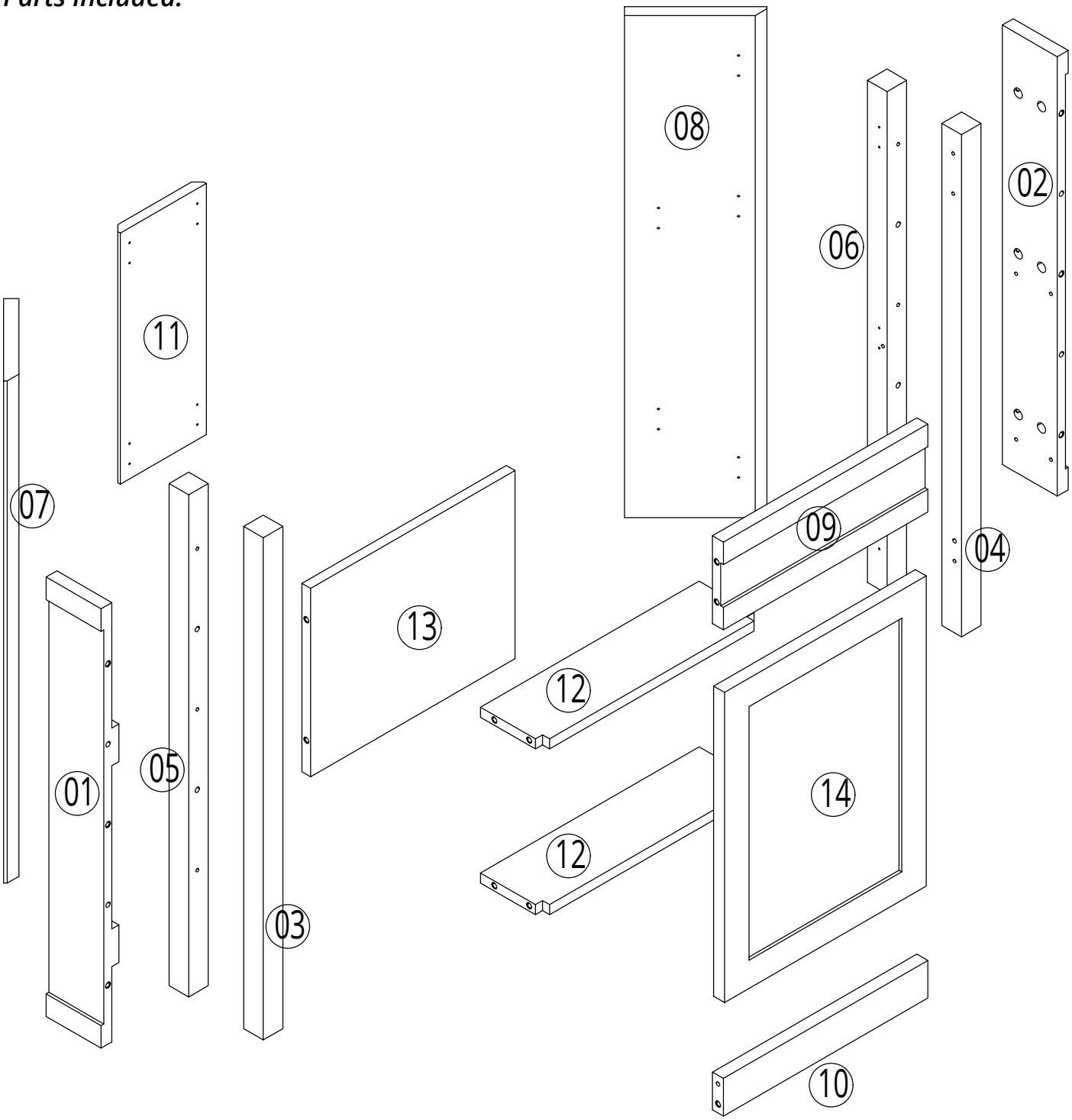

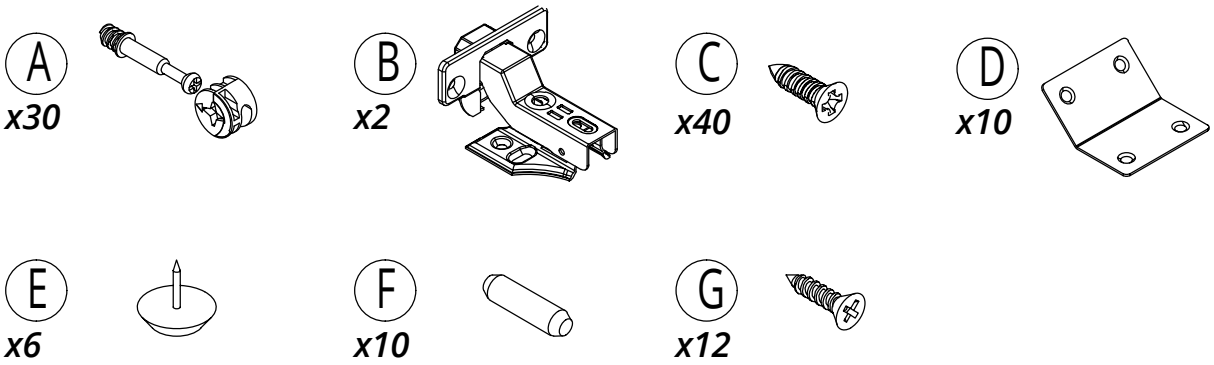

1

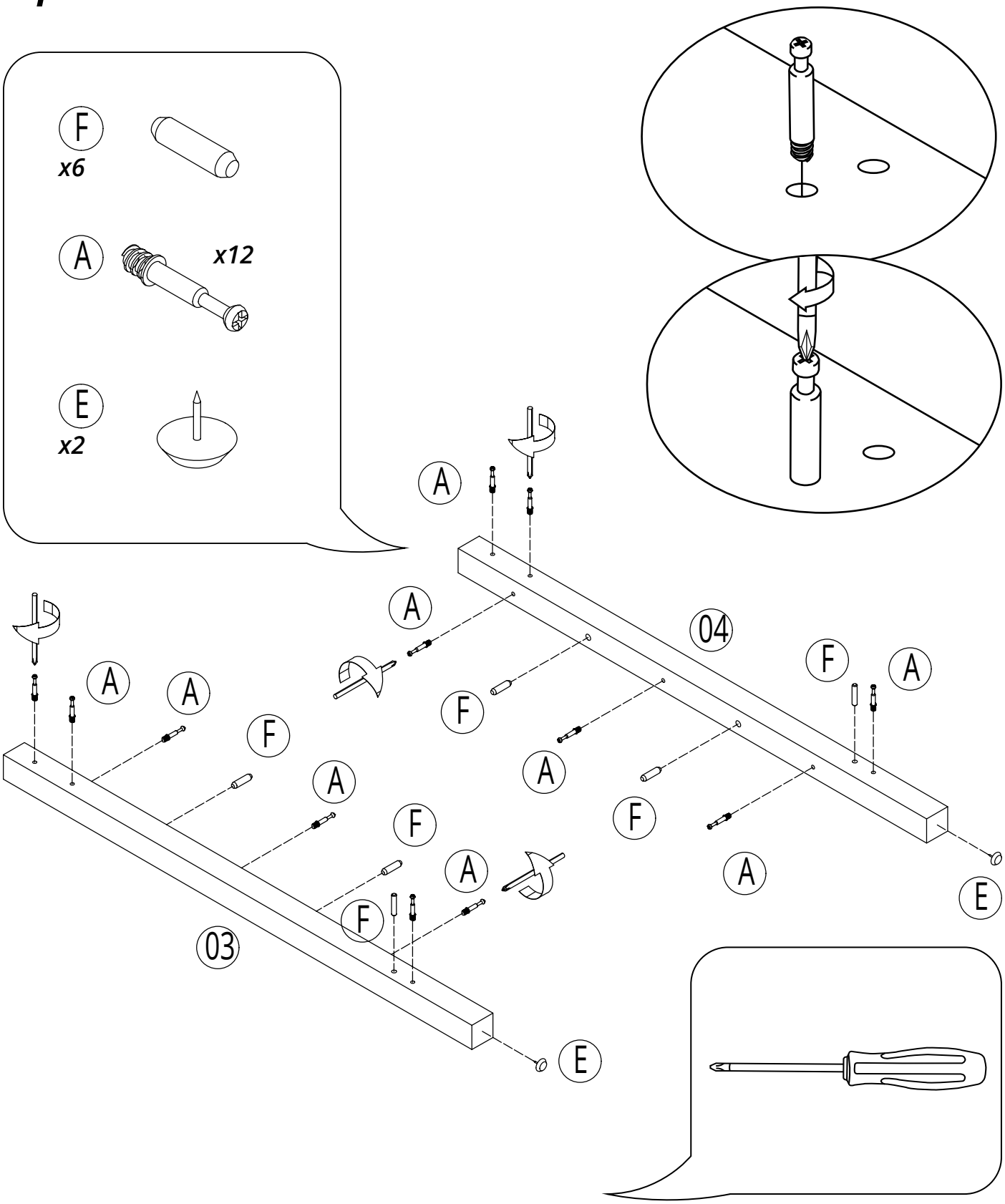

2

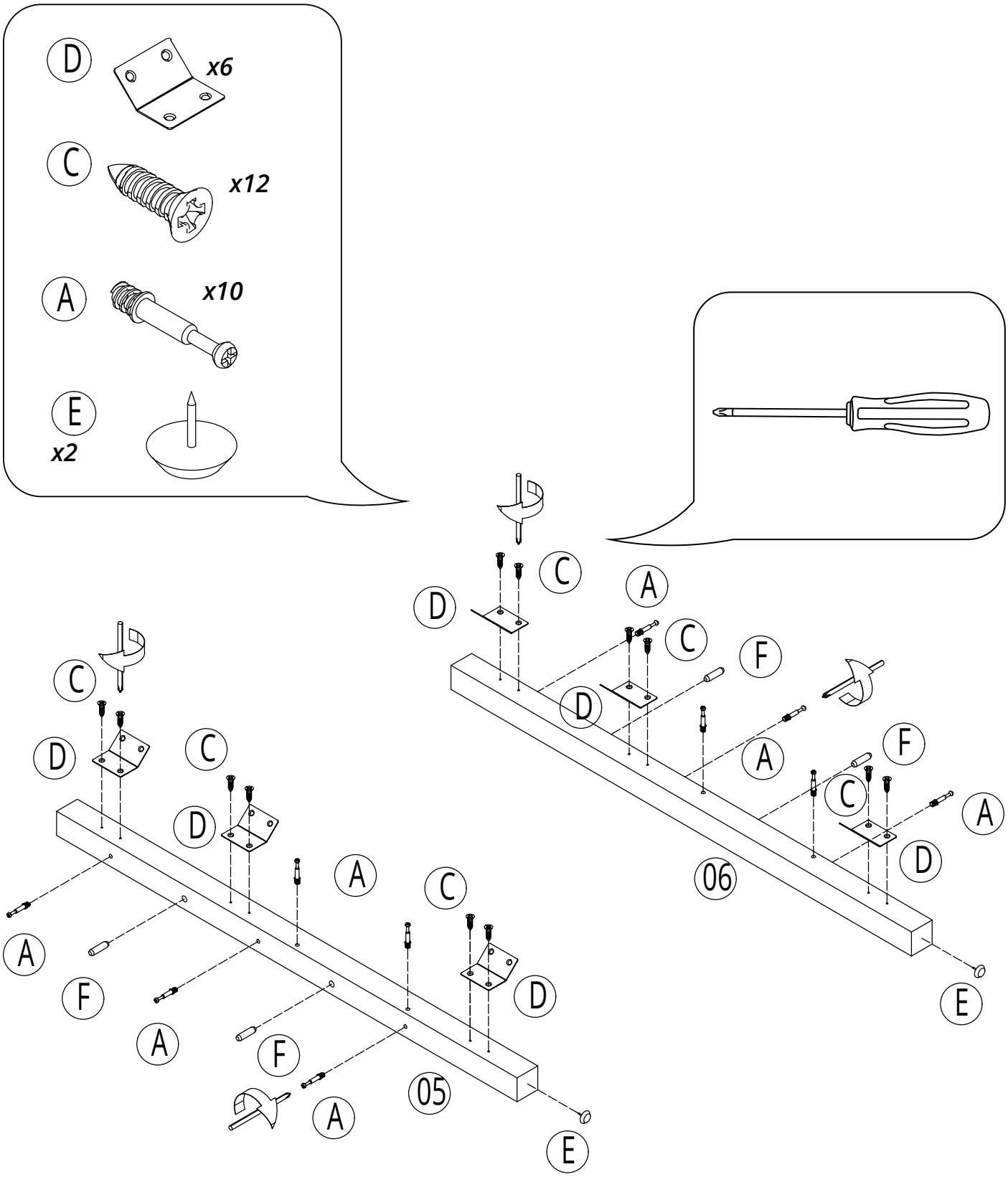

3

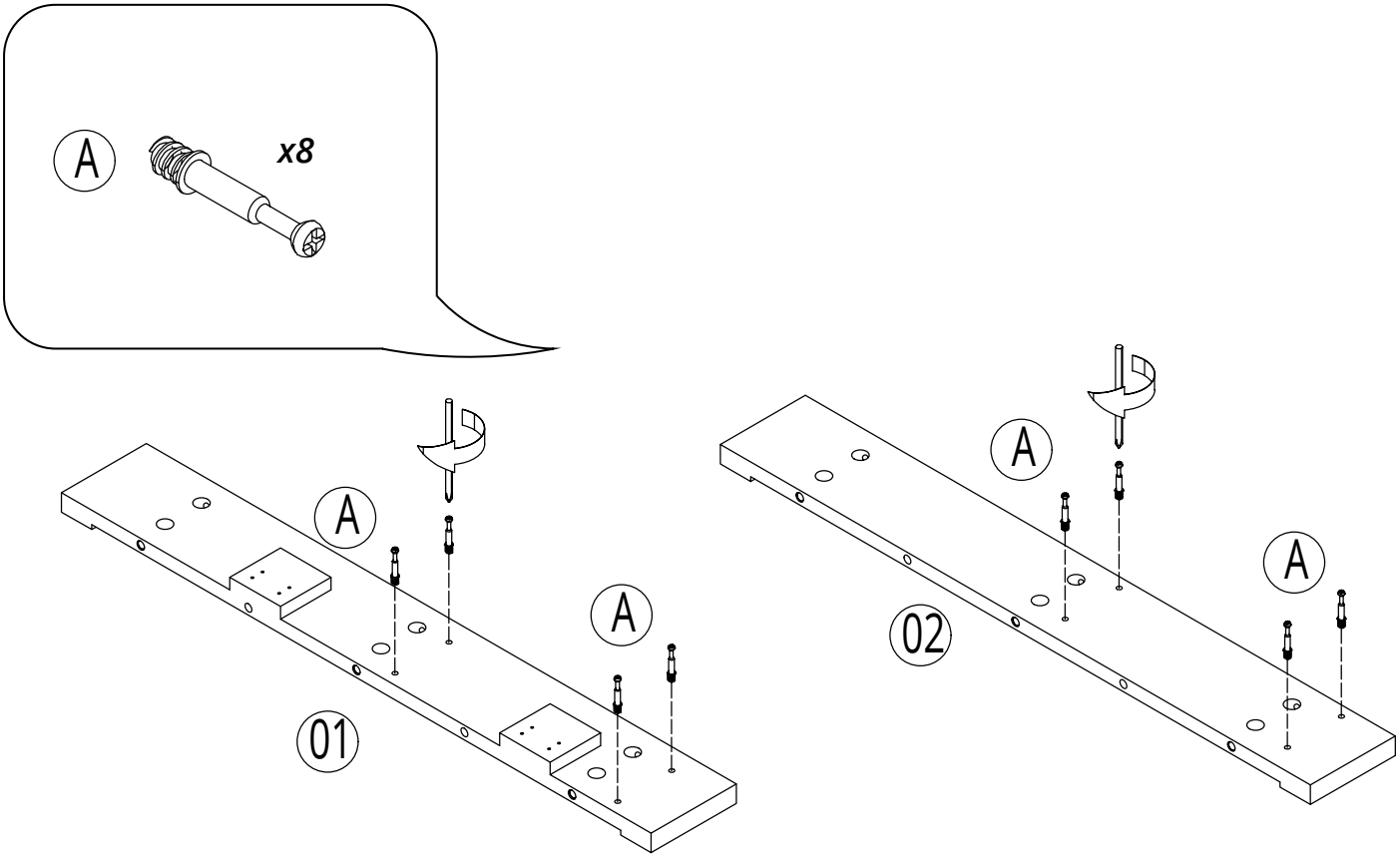

4

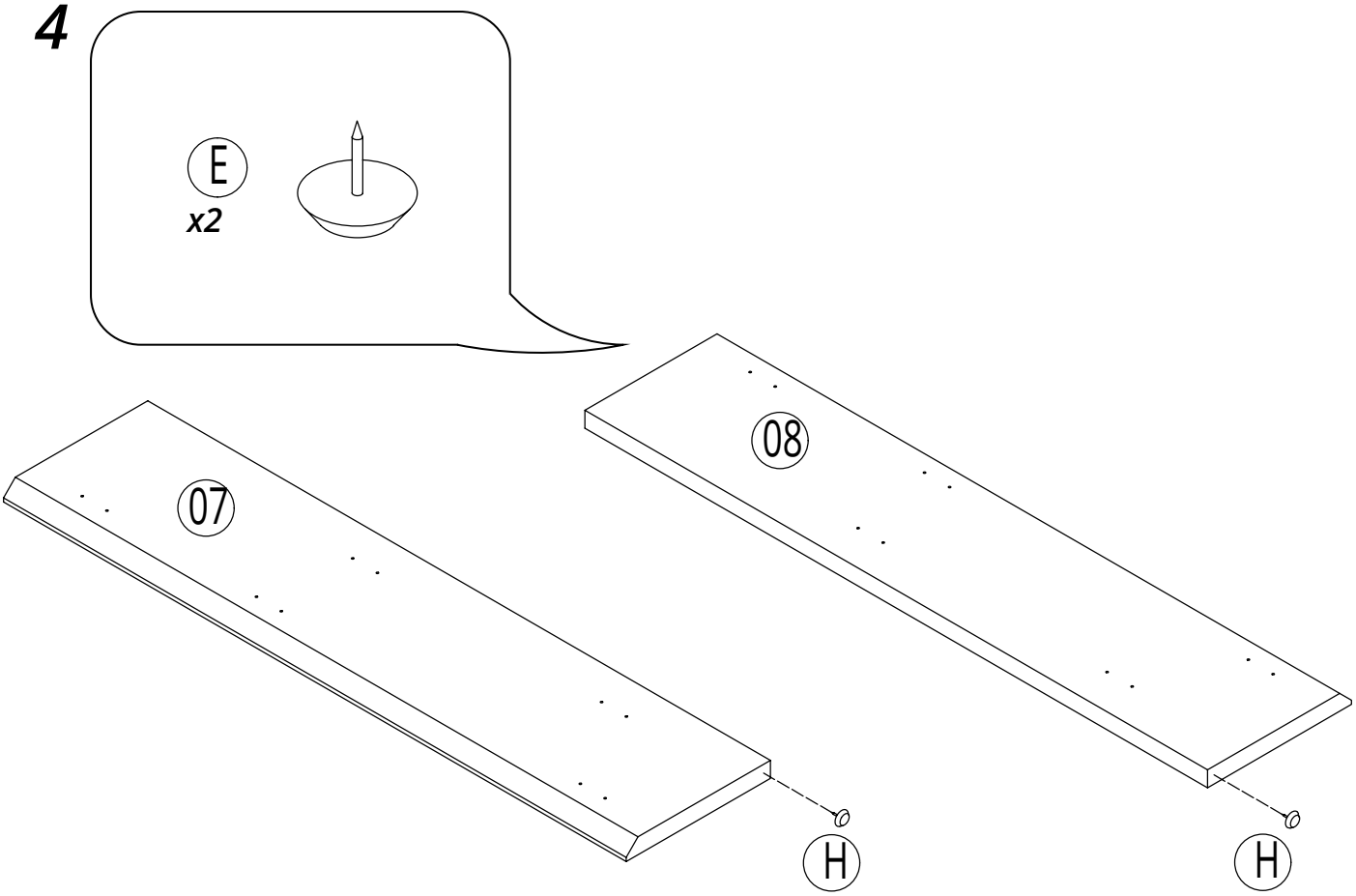

5

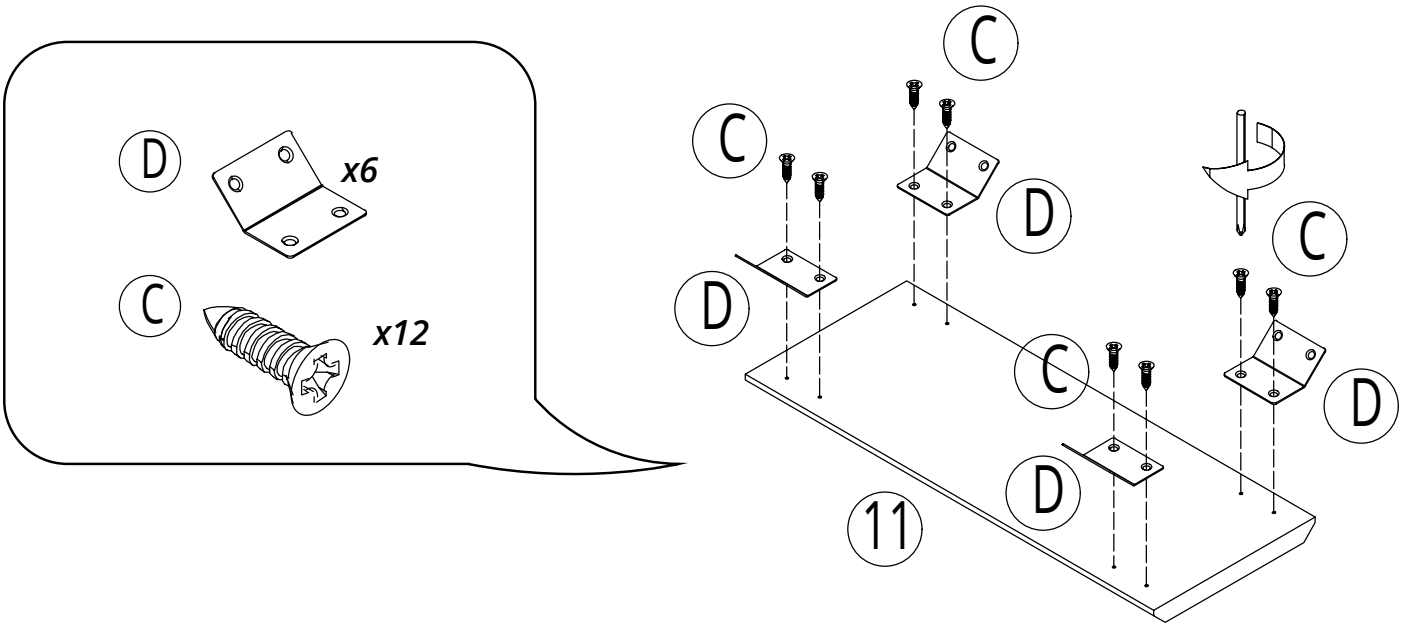

6

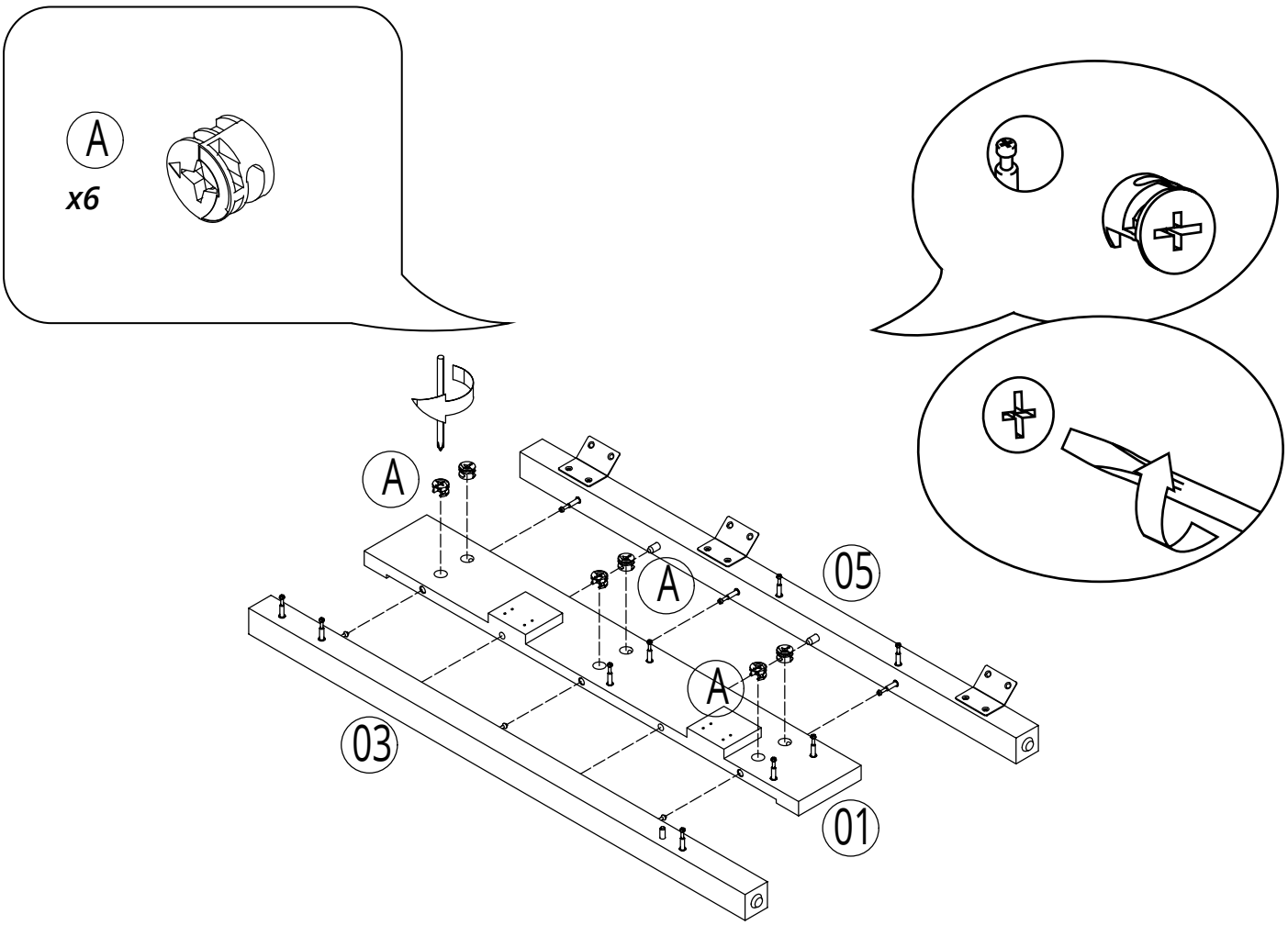

7

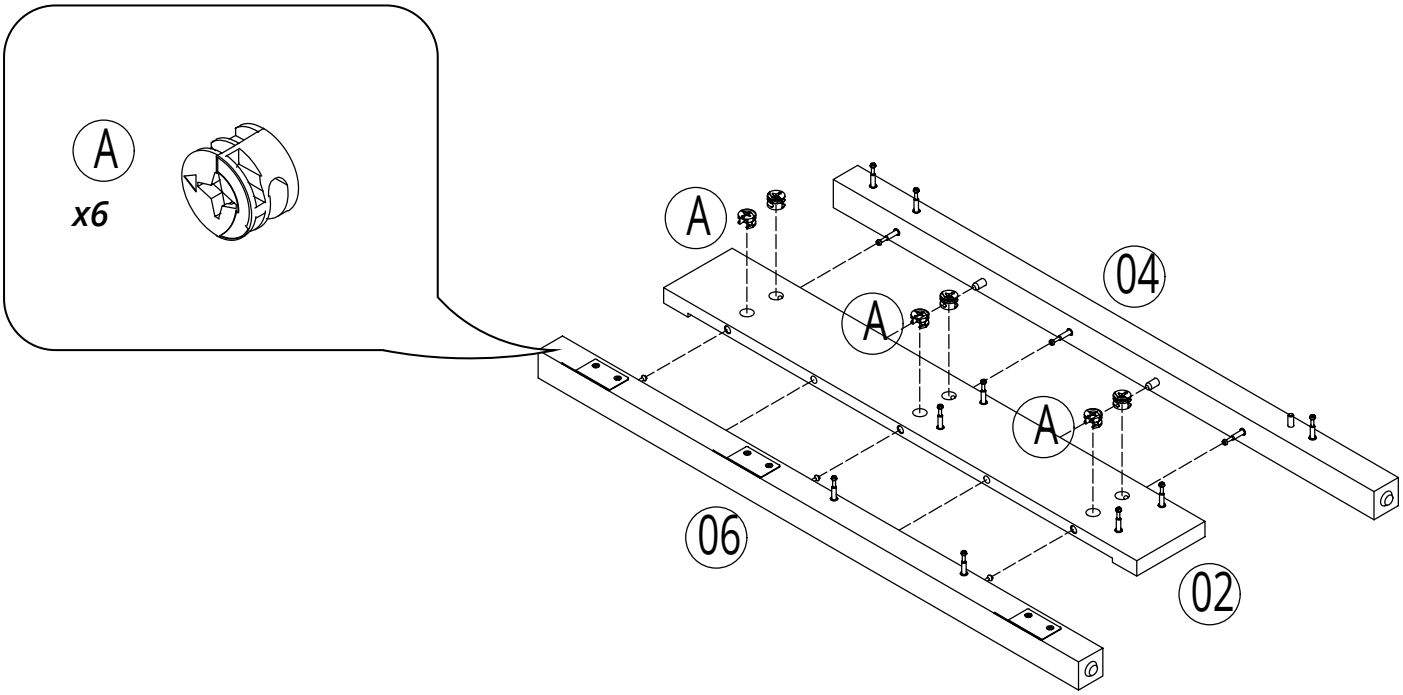

8

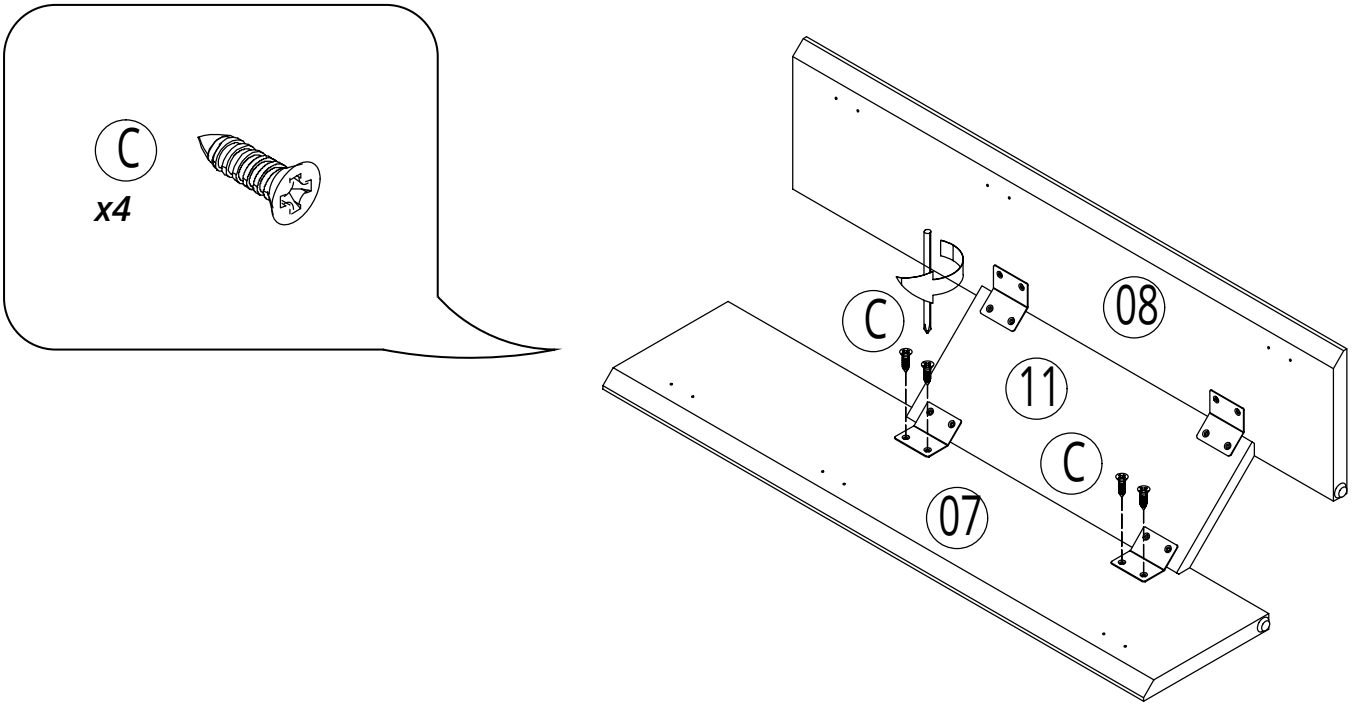

9

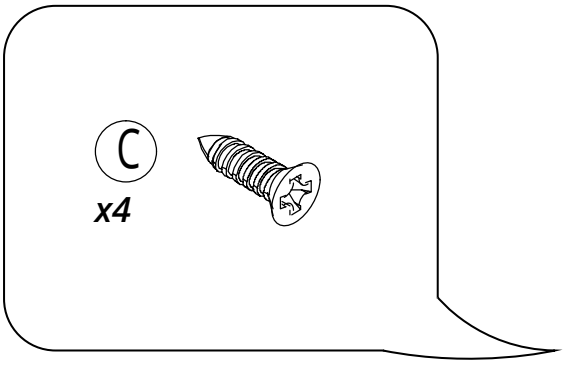

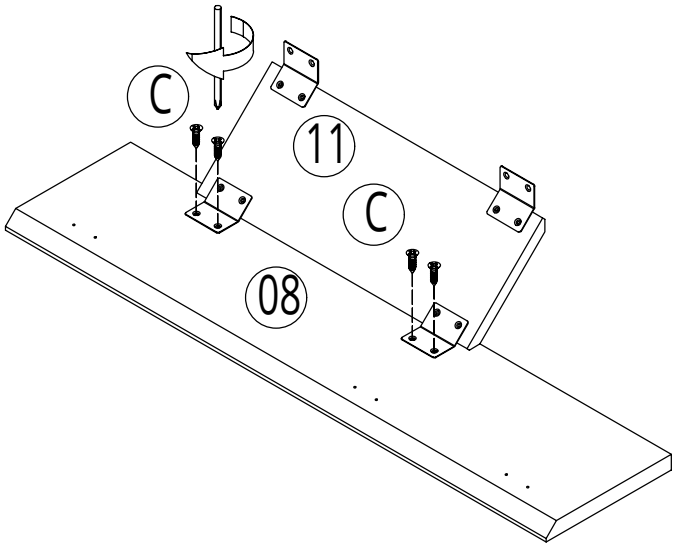

10

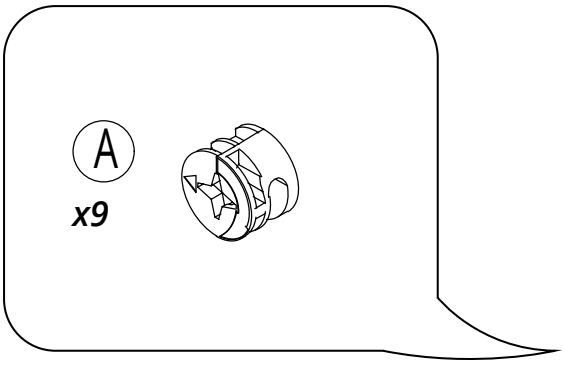

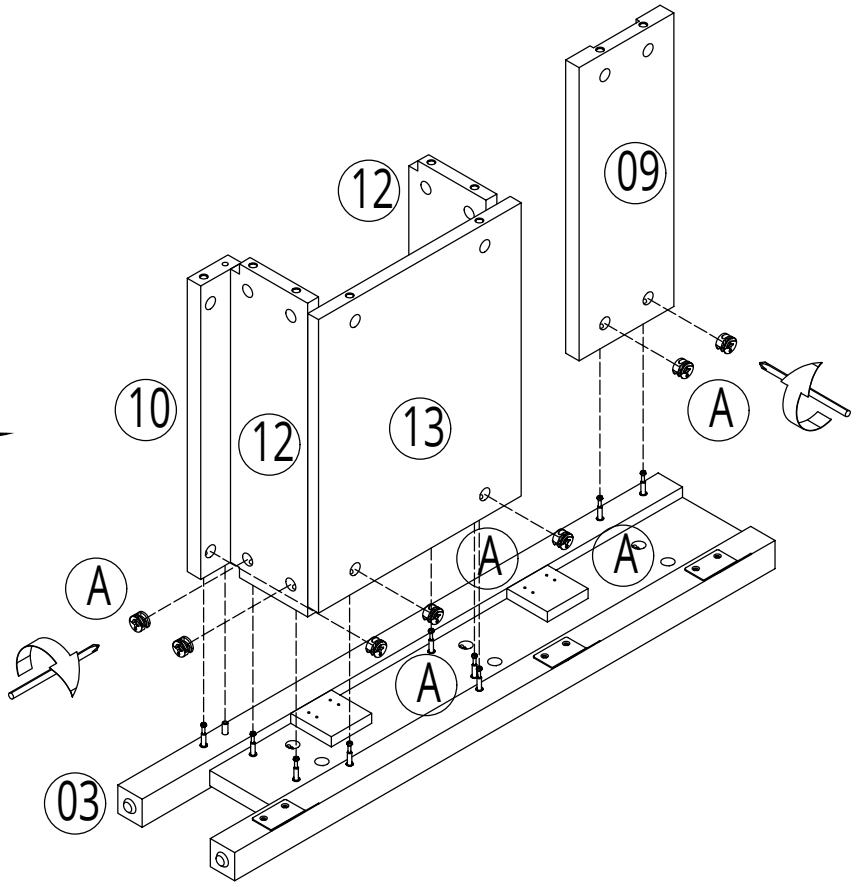

11

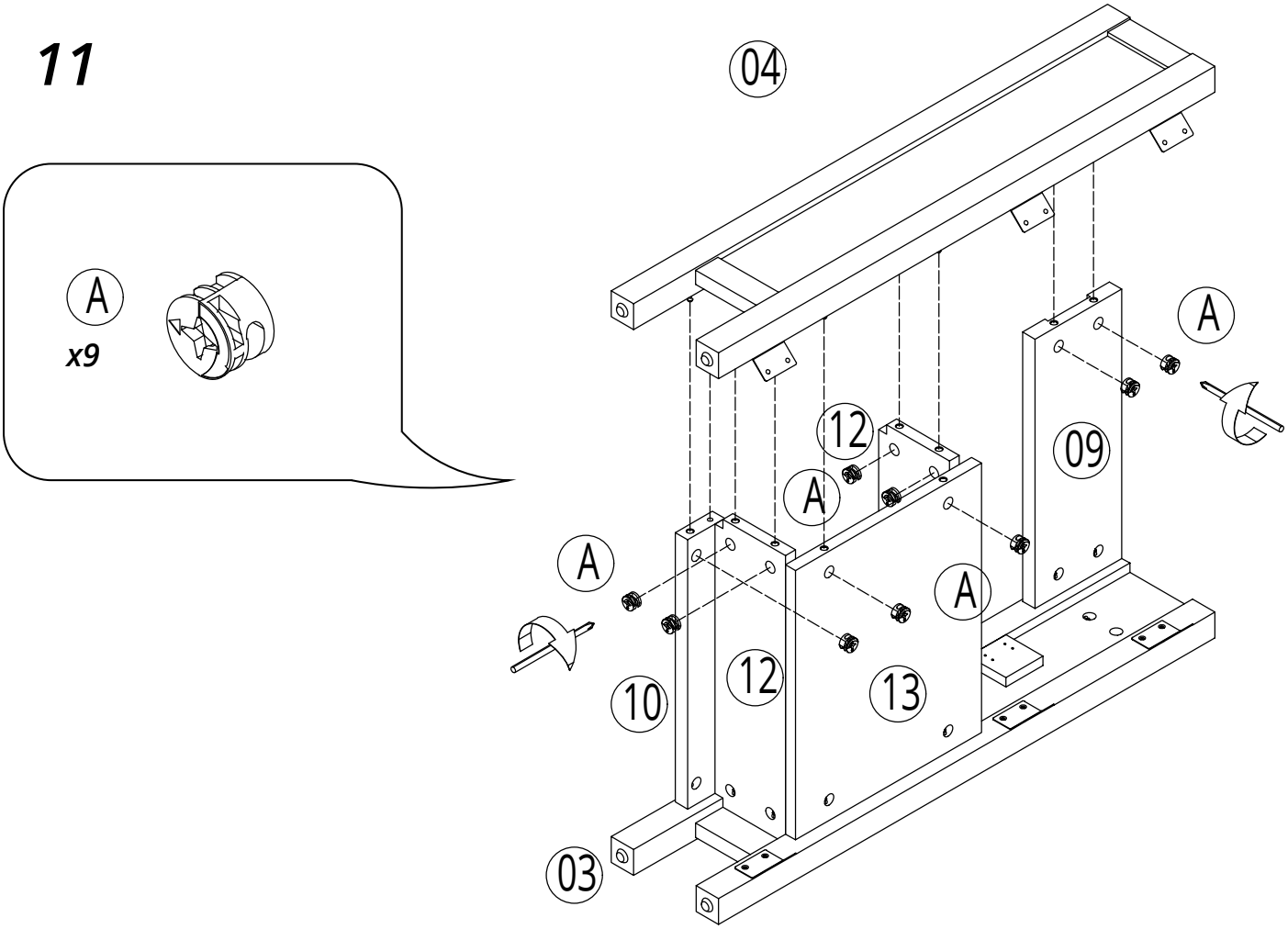

12

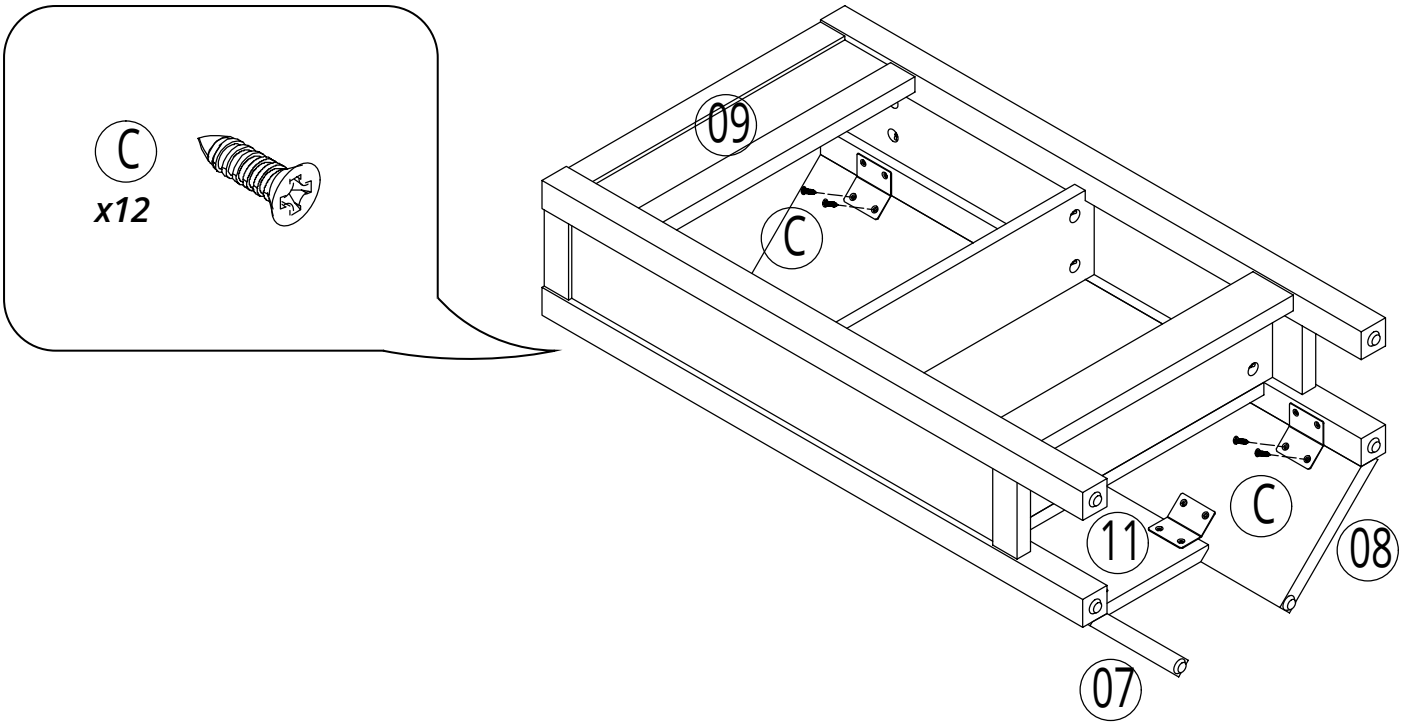

13

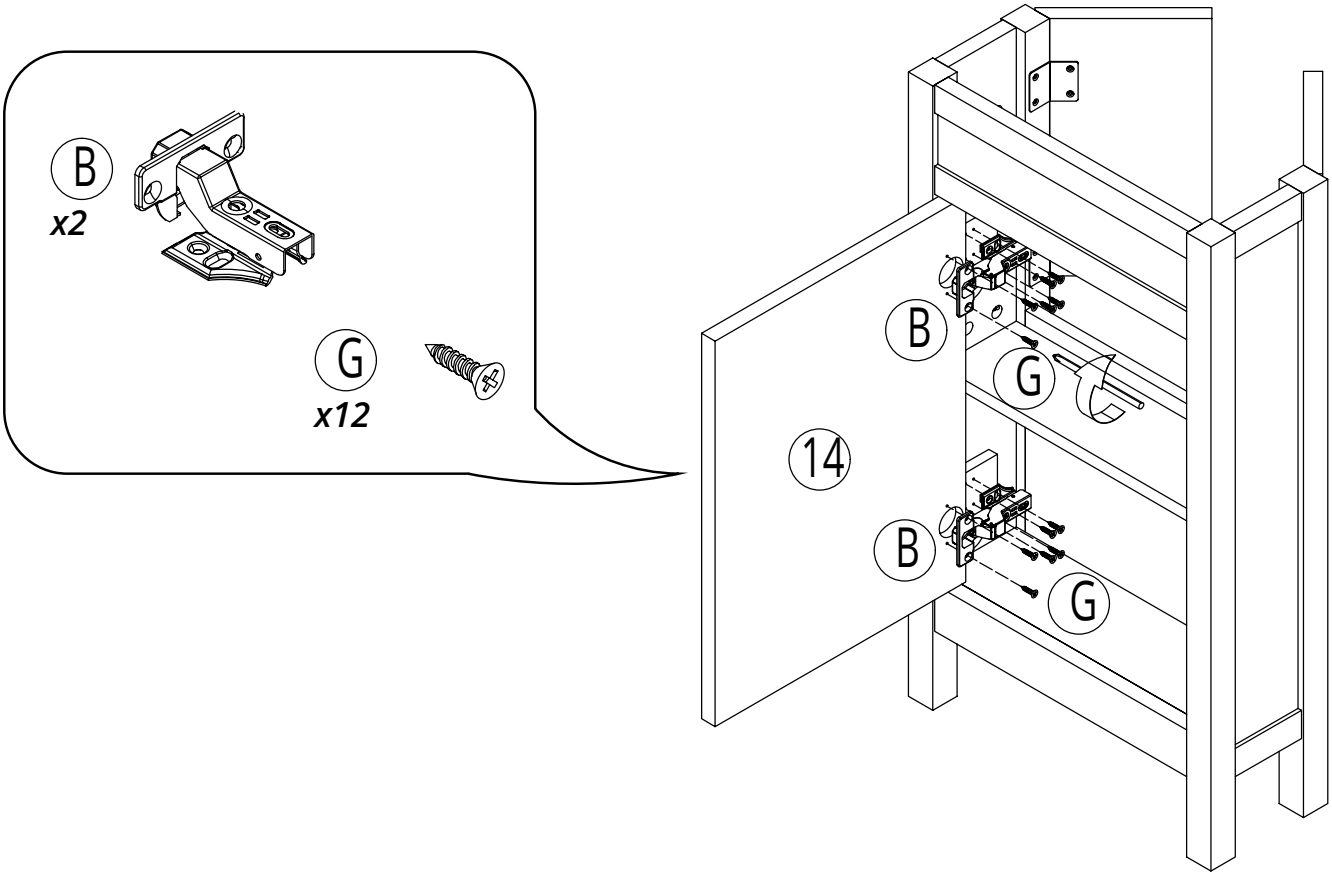

14

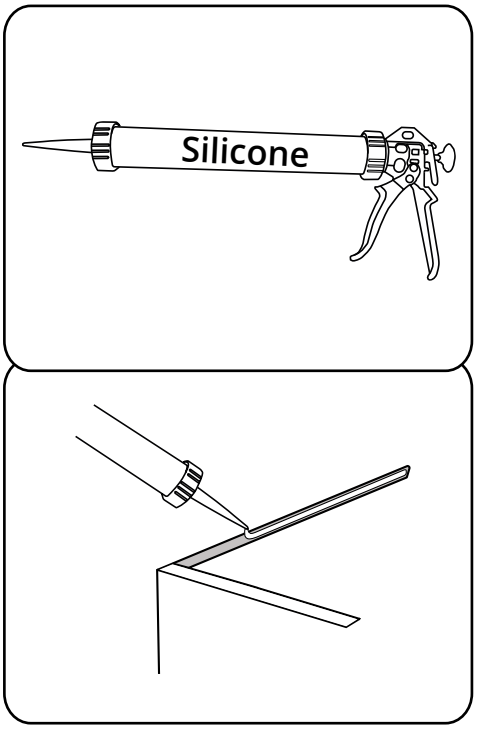

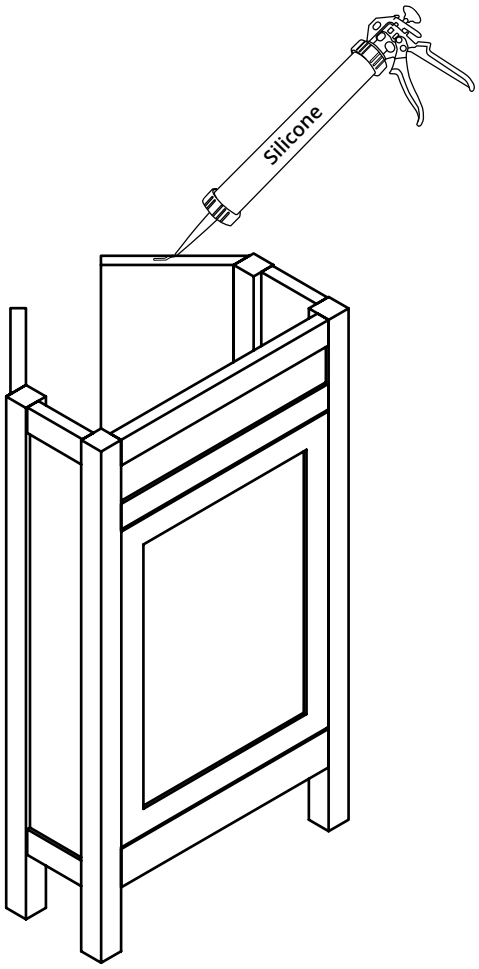

15

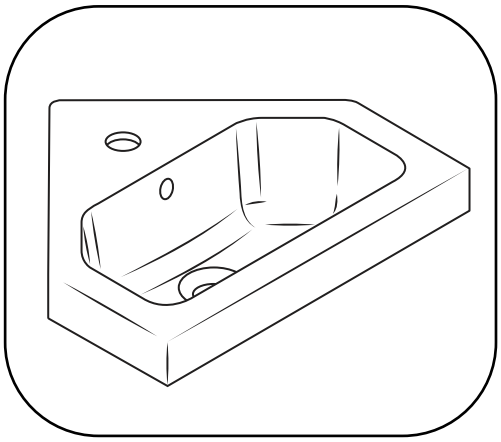

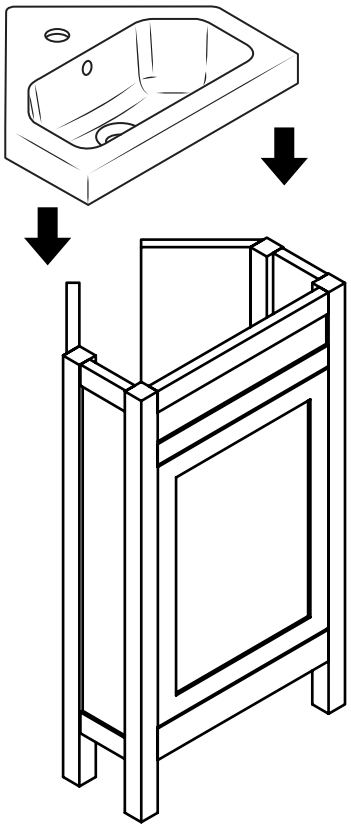

16

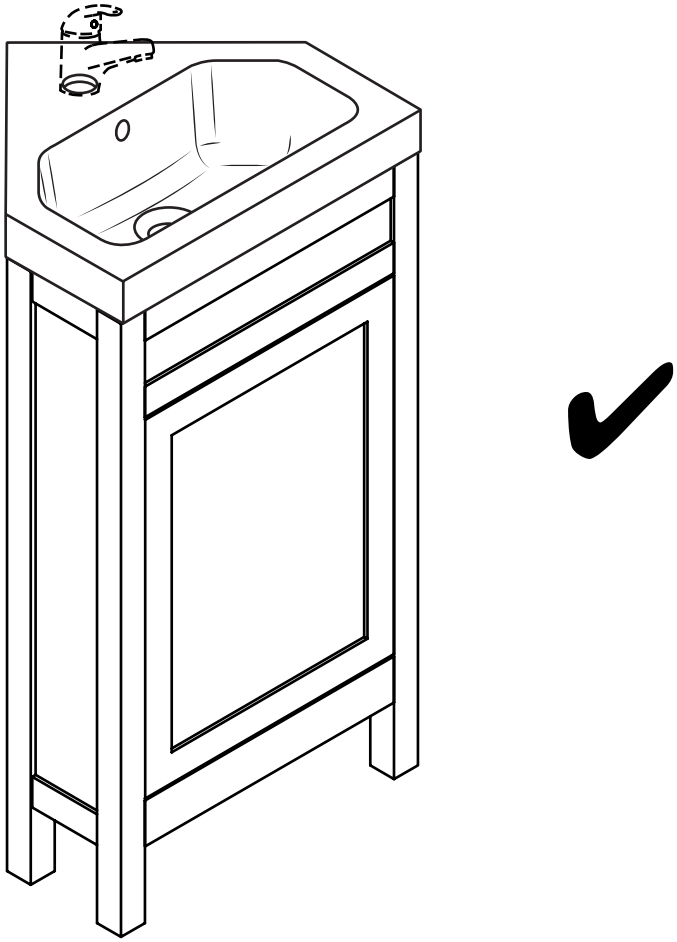

Hinge Adjustments:

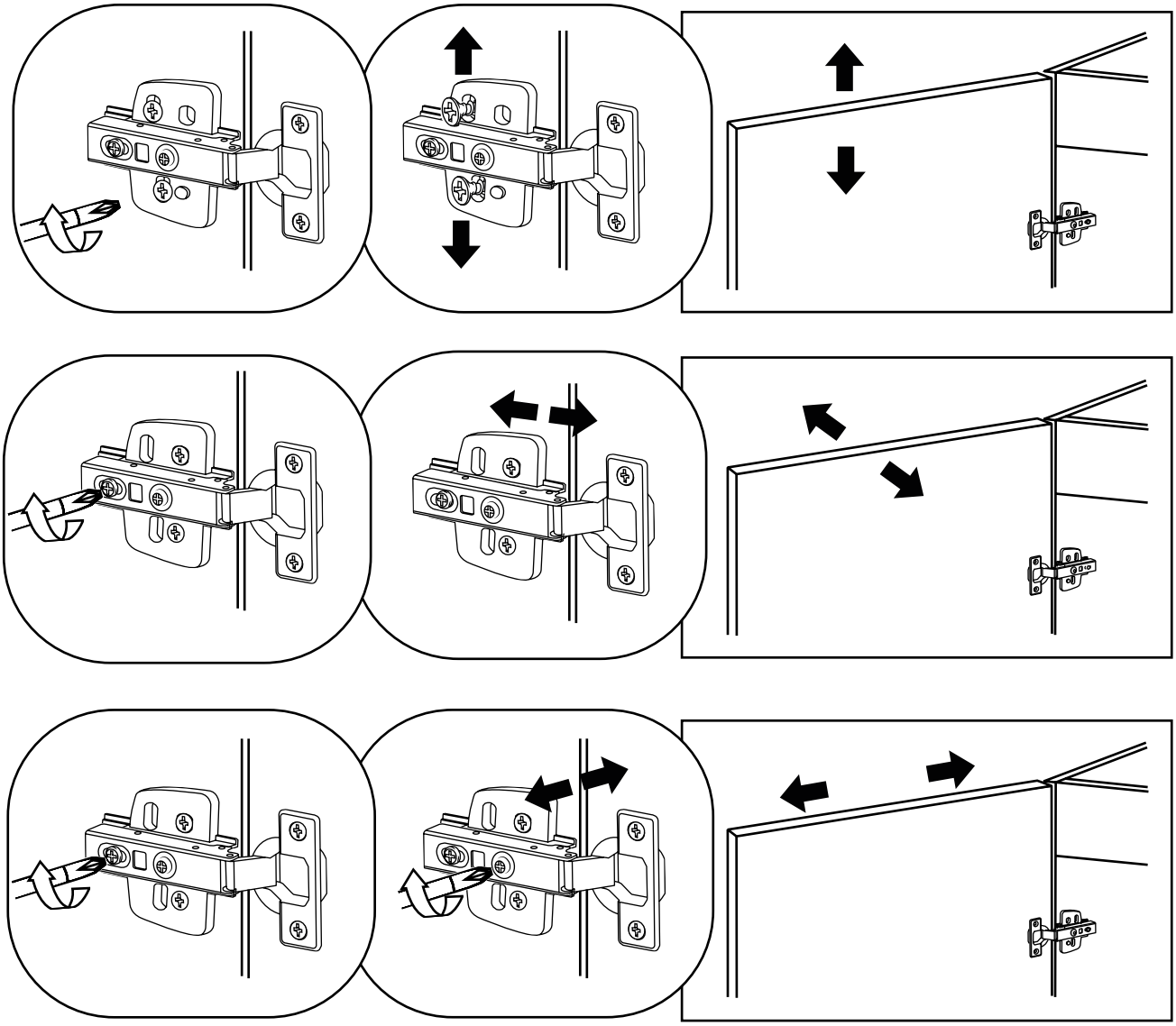

Optional: Handles

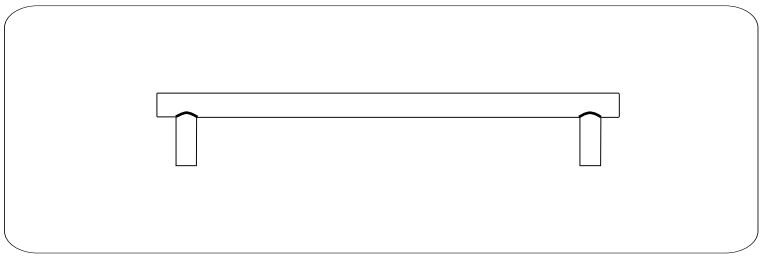

1

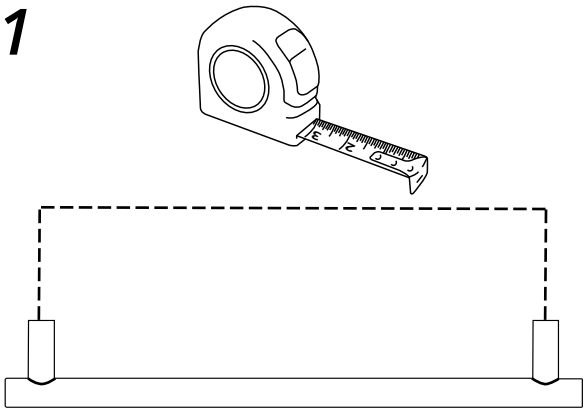

2

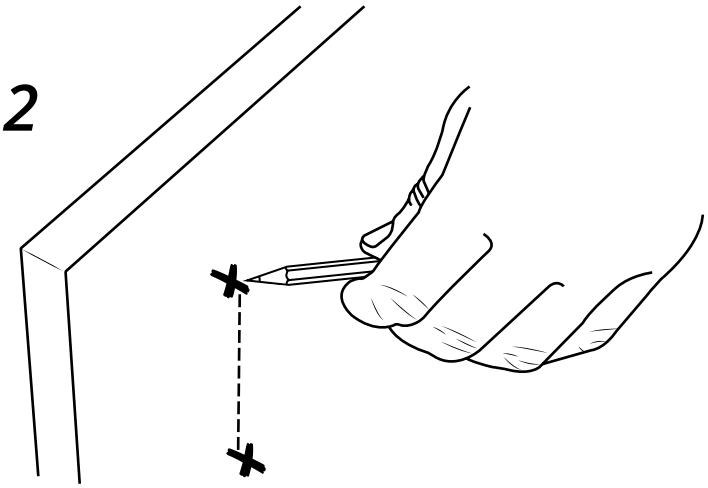

3

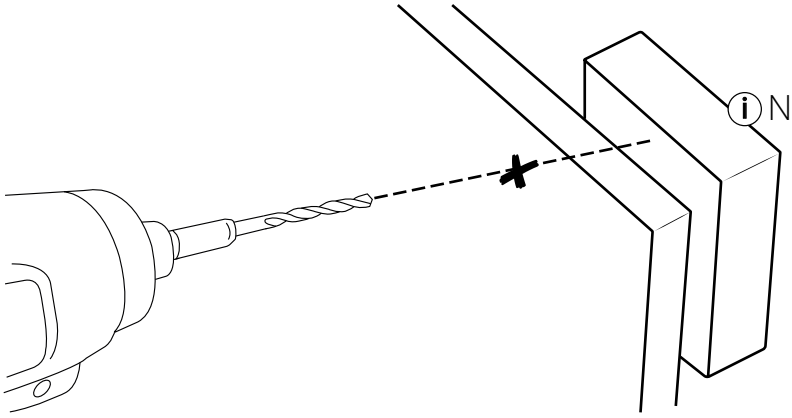

4

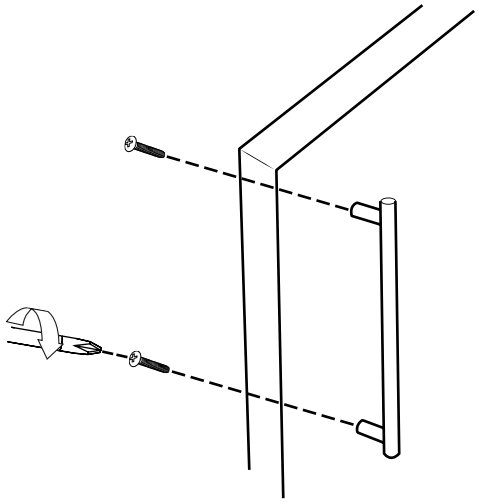

5

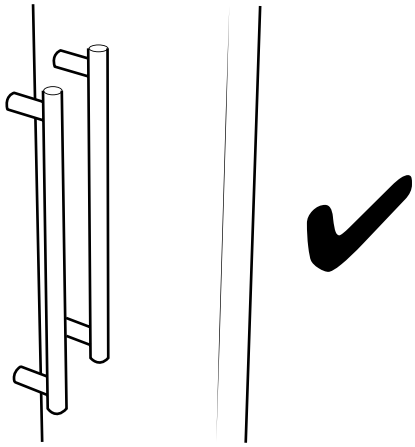

Optional: Handles

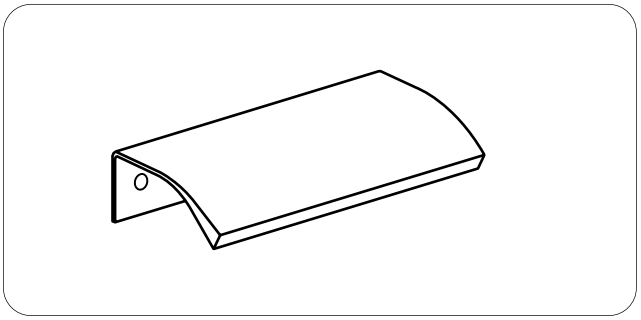

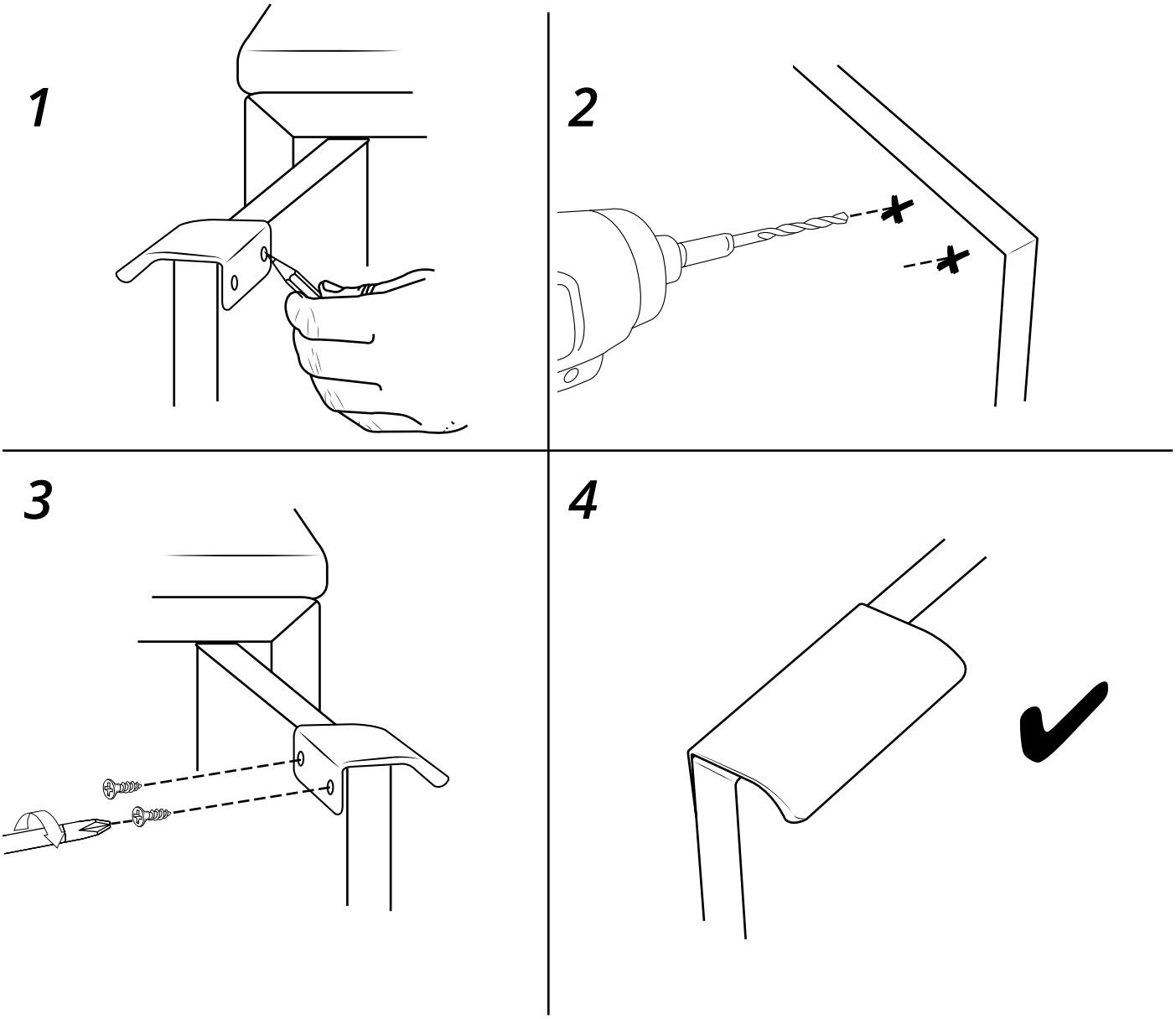

Optional: Handles

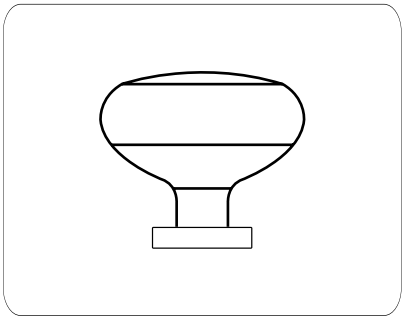

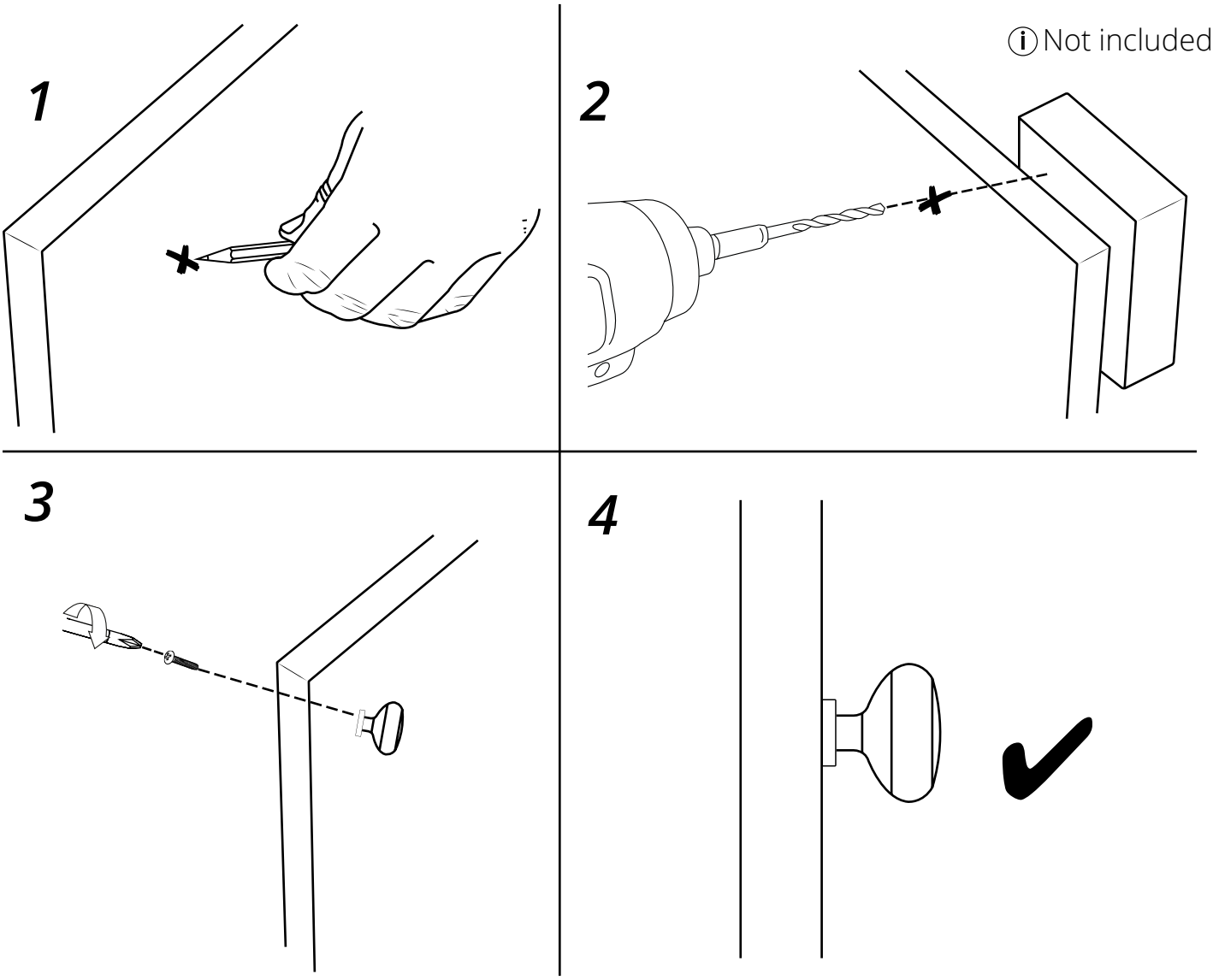

If you require any additional information or have any issues with this product please refer to the website.